PARTS LIST

South Bend Lathe®

Model SBL 400

South Bend Lathe, Inc.®

AN EMPLOYEE-OWNED COMPANY

400 West Sample Street
South Bend, Indiana 46625
Telephone: (219) 289-7771
Telex: 25-8471

S-278

TABLE OF CONTENTS

	PAGE
HEADSTOCK GEAR ASS'Y PARTS & DRAWING	2,3,4
HEADSTOCK LEVER ASS'Y PARTS & DRAWING	5,6,7
LUBRICATION SYSTEM PARTS & DRAWING	8,9
FEEDBOX GEAR ASS'Y PARTS & DRAWING	10,11,12,13
FEEDBOX LEVER ASS'Y PARTS & DRAWING	14,15
CHANGE GEAR ASS'Y PARTS & DRAWING	16,17
APRON GEAR ASS'Y PARTS & DRAWING	18,19,20
APRON LEVER ASS'Y PARTS & DRAWING	21,22
CHASING DIAL ASS'Y PARTS & DRAWING	23,24
STARTING LEVER ASS'Y PARTS & DRAWING	25,26
CARRIAGE ASS'Y-ROUND TOOLPOST PARTS & DRAWING	27,28,29
CARRIAGE ASS'Y-SQUARE TURRET PARTS & DRAWING	30,31,32
SQUARE TOOLPOST PARTS & DRAWING	33,34
TAILSTOCK ASS'Y PARTS & DRAWING	35,36,37
BED AND LEG ASS'Y PARTS & DRAWING	38,39,40
STEADY REST ASS'Y PARTS & DRAWING	41,42
FOLLOW REST ASS'Y PARTS & DRAWING	43,44
COOLANT AND LIGHTING SYSTEM PARTS & DRAWING	45,46,48
LONGITUDINAL STOP PARTS & DRAWING	49,50
TAPER TURNING ASS'Y PARTS & DRAWING	51,52,53
FOUR POSITION STOP PARTS & DRAWING	54,55
MICROMETER CARRIAGE STOP PARTS & DRAWING	56,57
COMPOUND REST SINGLE TOOLPOST PARTS & DRAWING	58,59

400 HEADSTOCK GEAR ASS'Y HG

ITEM	PART NUMBER	DESCRIPTION	Q'TY
1	PT2002021 F	WASHER	1
2	125 x 58	NUT, HEX	1
3	557 x 6620	KEY	1
4	103 x 51638	SCREW, SOCKET HEADLESS SET	1
5	PT1301102 F	SHAFT, 3'RD	1
6	PT1404102 F2	GEAR, 44T	1
7	PT1802060 F2	COLLAR, BALANCING	1
8	561 x 70	RING, STOP	1
9	101 x 1434	SCREW, SOCKET HEAD CAP	4
10	PT1505031 F2	COVER	1
11	30214 J	BEARING, TAPER ROLLER	1
12	AN 14	NUT, RING	2
13	557 x 151055	KEY	1
14	PT1304101 F	SHAFT, 2'ND	1
15	PT1802065 F	COLLAR	1
16	PT1505034 F	COVER	1
17	101 x 1434	SCREW, SOCKET HEAD CAP	3
18	6206	BEARING, BALL	1
19	PT1304100 F	SHAFT, 1'ST	1
20	AN 04	NUT, RING	1
21	AW 04	WASHER, BEARING	1
22	PT2002020 F	WASHER	1
23	557 x 8850	KEY	1
24	PT2605010 F	V-PULLEY	1
25	6206	BEARING, BALL	1
25-1	SM45308	SEAL, OIL	1
26	PT1802062 F	COLLAR	1
27	6306	BEARING, BALL	1
28	101 x 1434	SCREW, SOCKET HEAD CAP	4
29	PT1505032 F	CASE, BEARING	1
30	PT1404110 F	GEAR, 44T	1
31	561 x 42	RING, STOP	1
32	557 x 7760	KEY	1
33	PT1404105 F	GEAR, 36T	1
34	PT1404104 F	GEAR, 47T	1
35	PT1404103 F	GEAR, 20T	1
36	PT1404109 F	GEAR, 33T	1
37	557 x 108110	KEY	1
38	PT1404108 F	GEAR, 60T	1
39	561 x 35	RING, STOP	1
40	PT1802061 F	COLLAR	1
41	6305	BEARING, BALL	1
42	6206	BEARING, BALL	1
43	PT1802064 F	COLLAR	1
44	561 x 30	RING, STOP	1
45	561 x 45	RING, STOP	1
46	PT1404107 F	GEAR, 49T	1
47	557 x 10923	KEY	1
48	PT1404106 F	GEAR, 17T	1
49	PT1802063 F	COLLAR	1

400 HEADSTOCK GEAR ASS'Y HG

ITEM	PART NUMBER	DESCRIPTION	Q'TY
50	6305	BEARING, BALL.....	1
51	PT2405030 F	PLATE, ADJUSTING.....	1
52	101 x 1434	SCREW, SOCKET HEAD CAP.....	3
53	PT1505023 F2	COVER.....	1
54	125 x 12	NUT, HEX.....	1
55	111 x 12114	BOLT, ADJUSTING.....	1
56	PT1303006 F2	SPINDLE, MAIN.....	1
57	110 - D 601	CAM.....	6
58	110 - D 604	SPRING.....	6
59	110 - D 603	SCREW.....	6
62	PT1601010 F2	SEAL, METAL.....	1
63	PT1505030 F2	COVER.....	1
64	101 x 141	SCREW, SOCKET HEAD CAP.....	4
65	32219 J	BEARING, TAPER ROLLER.....	1
66	PT1805060 F2	COLLAR, BALANCING.....	1
67	557 x 151090	KEY.....	1
68	PT1404100 F2	GEAR, 63T.....	1
69	PT1404101F2	GEAR, 63T.....	1
70	AN17	NUT, RING.....	1
70-1	AW17	WASHER, BEARING.....	1
71	PT1105005 F2	BODY, HEADSTOCK.....	1
72	PT2801059 F	BOLT, SHOULDER.....	1
73	143 x 58	WASHER, SPRING.....	4
74	119 x 582	BOLT, HEX.....	4
75	6204	BEARING, BALL.....	1
76	PT1802068 F	COLLAR.....	1
77	PT1301103 F	SHAFT, 4'TH	1
78	PT1802067 F	COLLAR.....	1
79	103 x 51638	SCREW, SOCKET HEADLESS SET.....	1
80	6004	BEARING, BALL.....	2
81	PT1404111 F	GEAR, 24T.....	1
82	PT1802066 F	COLLAR.....	1
83	PT1404112 F	GEAR, 44T.....	1
84	557 x 7780	KEY.....	1
86	101 x 1434	SCREW, SOCKET HEAD CAP.....	4
87	PT1505035 F2	CASE, BEARING.....	1
88	PT1505036 F	COVER.....	1
89	101 x 31612	SCREW, SOCKET HEAD CAP.....	3
90	6007	BEARING, BALL.....	1
91	SM553511	SEAL, OIL.....	1
92	PT1404113 F	GEAR, 30T CHANGE (STANDARD).....	1
92-1	PT1401136 F	GEAR, 32T CHG (STD,11 1/2" 21 TPI)	1
92-2	PT1401137 F	GEAR, 35T CHG (STD, MODULE).....	1
92-3	PT1401139 F	GEAR, 51T CHG (MODULE).....	1
92-4	PT1401140 F	GEAR, 68T CHG (MODULE).....	1
92-5	PT1401138 F	GEAR, 37T CHG (D.P).....	1

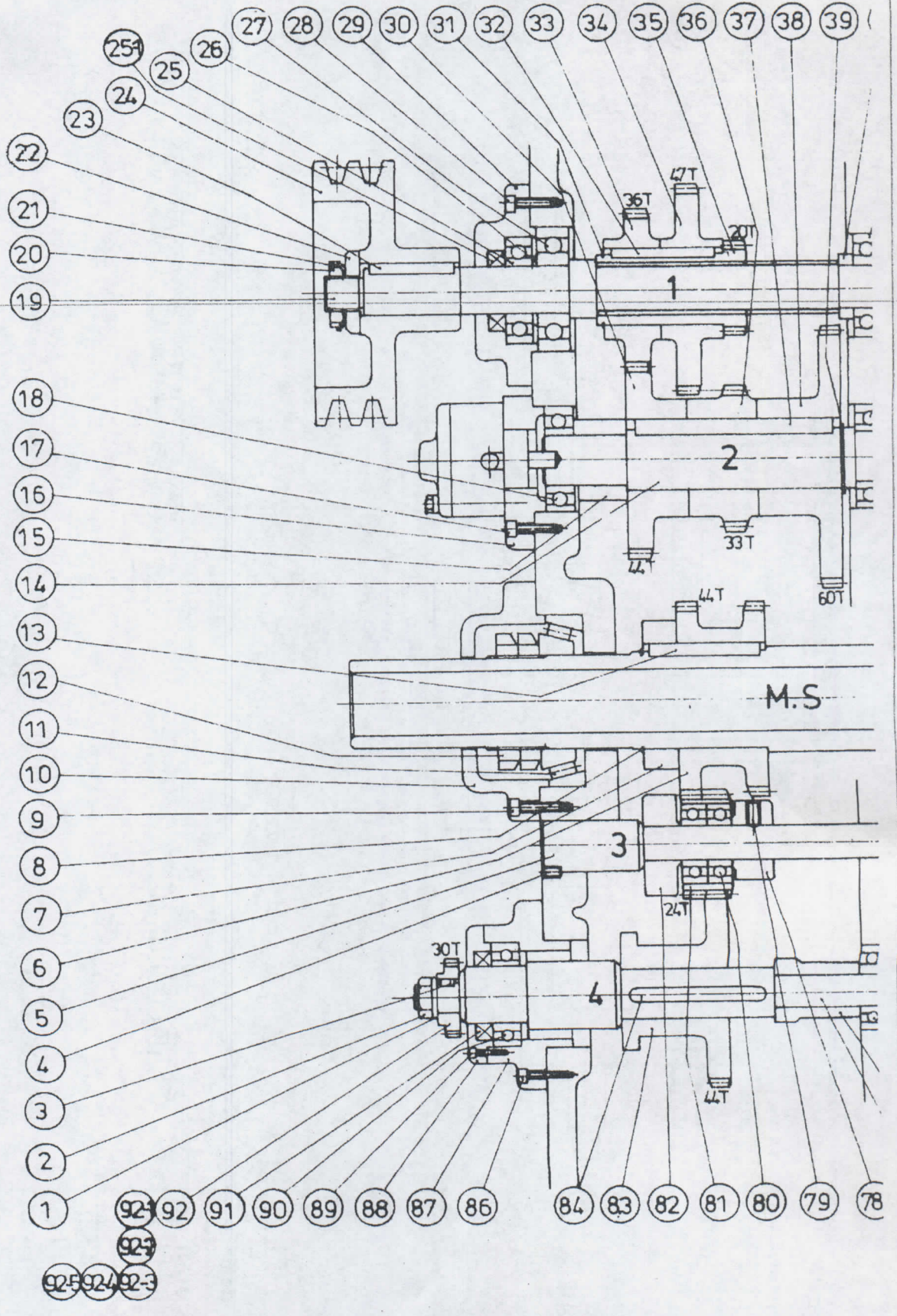
27
28
29
30
31
32
33
34
35
36
37
38
39
25-1
26
25
24
23
22
21
20
19
18
17
16
15
14
13
12
11
10
9
8
7
6
5
4
3
2
1
92-1
92
91
90
89
88
87
86
84
83
82
81
80
79
78
92-2
92-5
92-4
92-3
47T
36T
20T
1
2
33T
44T
60T
44T
M.S
3
24T
30T
4
44T

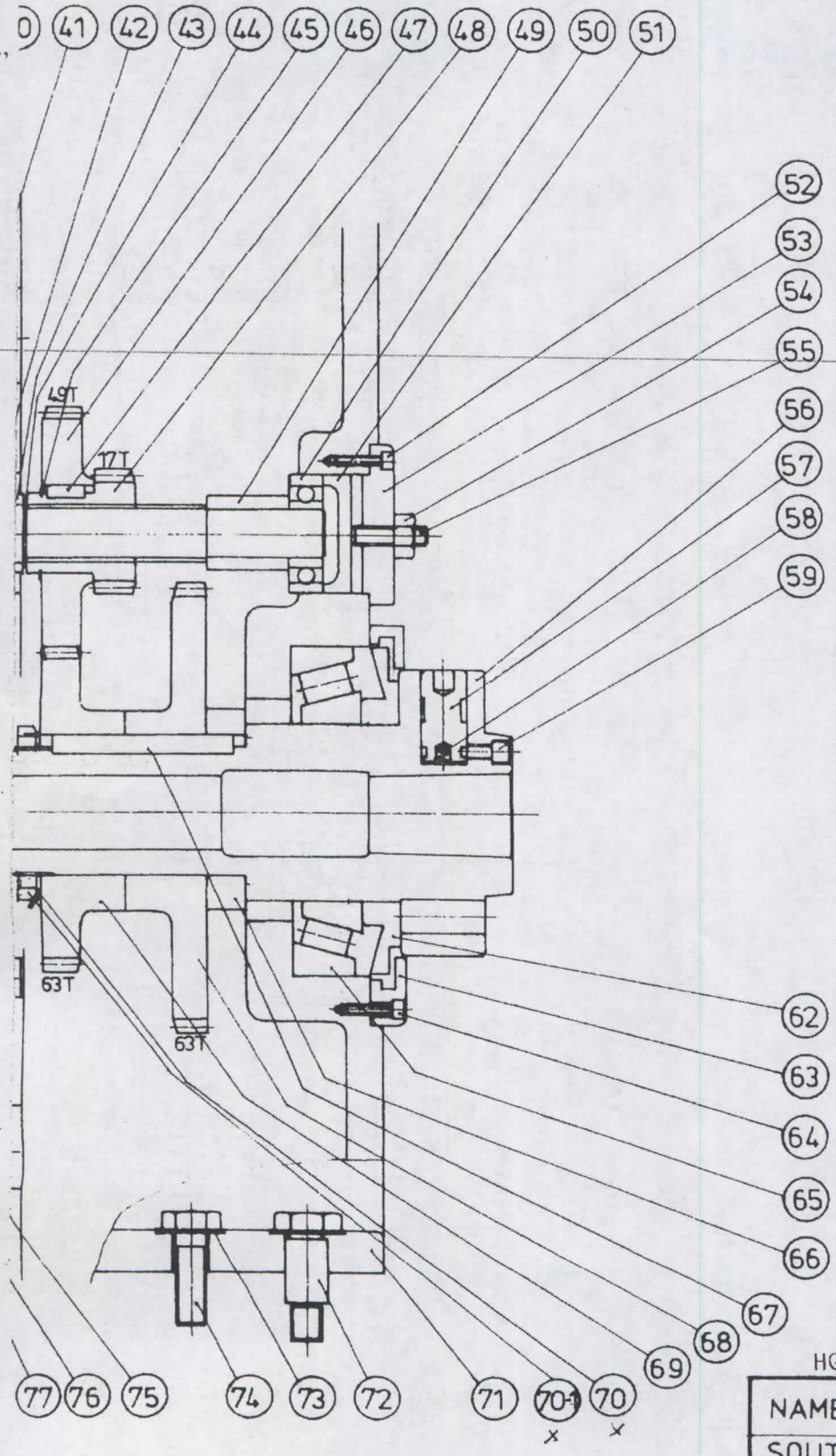

NAME	HEAD STOCK GEAR ASS'Y	
SOUTH BEND LATHE, INC.		
TYPE	DRAWING	DATE
SBL 400	P. G. J.	1983.1

400 HEADSTOCK LEVER ASS'Y HL

ITEM	PART NUMBER	DESCRIPTION	Q'TY
51	523 x 356	SCREW, MACHINE.....	8
52	170 - 02F F2	PLATE, HEADSTOCK NAME.....	1
53	549 x 615	PIN, STRAIGHT.....	1
54	157 x 516	BALL, STEEL.....	2
55	SP0806040	SPRING.....	2
56	103 x 51638	SCREW, SCOKET HEADLESS SET.....	2
57	P 15	O-RING.....	1
58	551 x 4860	PIN, TAPER.....	1
59	PT2102020 F	BOSS, HANDLE.....	1
60	PT1901034 F	BUSHING, FLANGED.....	1
61	101 x 31638	SCREW, SOCKET HEAD CAP.....	2
62	PT2302020 F	LEVER.....	1
63	160 - 04 C	GRIP, HANDLE.....	1
64	PT1705050 F	COVER, HEADSTOCK UPPER.....	1
65	101 x 5161	SCREW, SOCKET HEAD CAP.....	4
66	PT1302107 F	SHAFT, 8'TH	1
67	PT1907033 F	BUSHING.....	1
68	103 x 51638	SCREW, SOCKET HEADLESS SET.....	1
69	PT2505035 F	ROD, CONNECTING.....	1
70	PT2902031 F	PIN, TAPER.....	1
71	125 x 316	NUT, HEX.....	1
72	555 x 325	PIN, SPLIT.....	1
73	PT2502034 F	SHOE, SHIFTING.....	1
74	PT2802040 F	BOLT, ADJUSTING.....	2
75	PT2202060 F	BLOCK, ADJUSTING.....	1
76	101 x 38112	SCREW, SOCKET HEAD CAP.....	1
77	549 x 643	PIN, STRAIGHT.....	2
78	523 x 356	SCREW, MACHINE.....	6
79	170 - 16 F2	PLATE, ELECTRIC NAME.....	1
80	KH - 3011	SWITCH, SELECTOR.....	2
81	KH - 504	LAMP, PILOT.....	1
82	KH - 3008	SWITCH, PUSHBUTTON.....	2
83	KH - 308	SWITCH, PUSHBUTTON.....	1

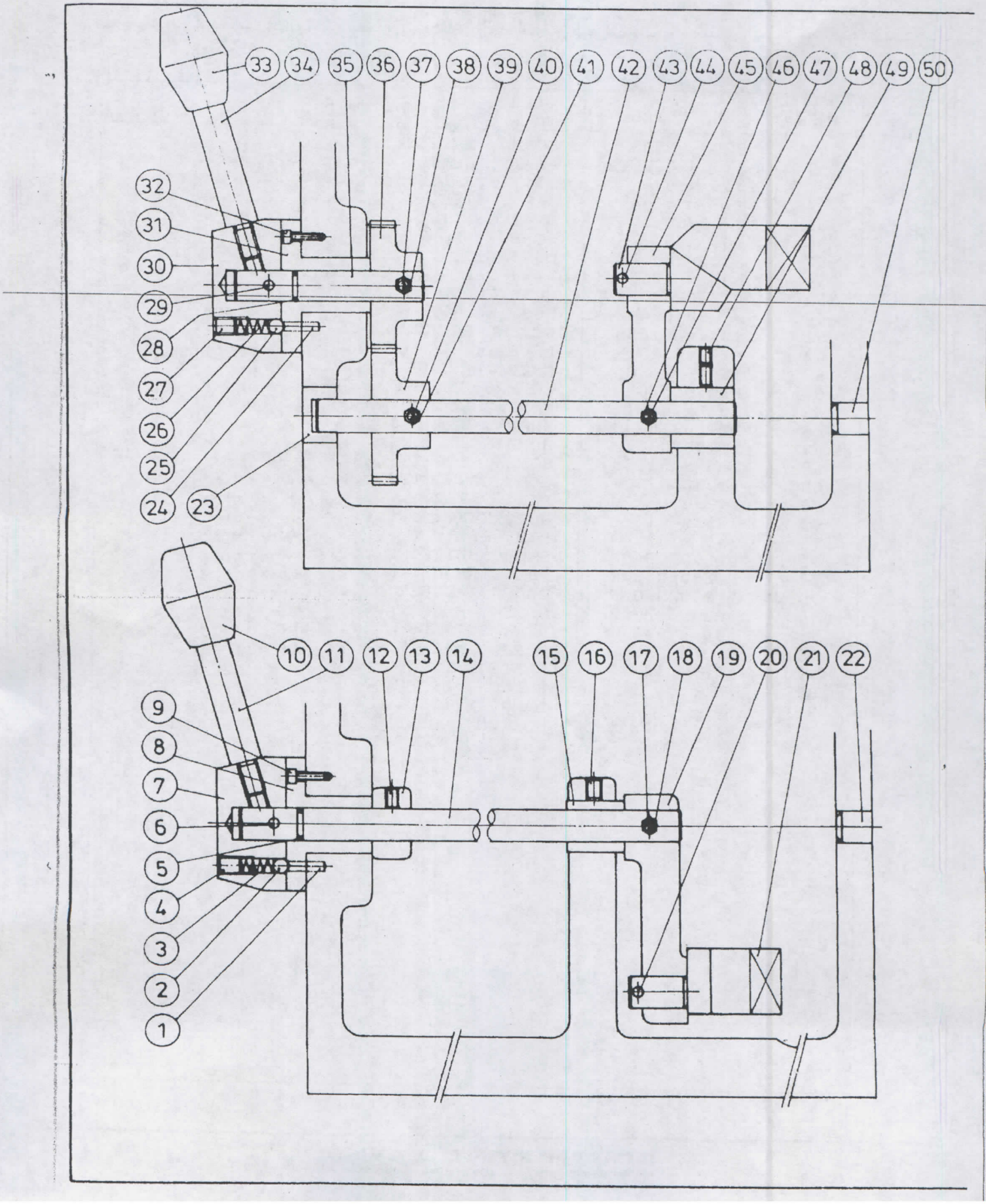
33
34
35
36
37
38
39
40
41
42
43
44
45
46
47
48
49
50
32
31
30
29
28
27
26
25
24
23
10
11
12
13
14
15
16
17
18
19
20
21
22
9
8
7
6
5
4
3
2
1

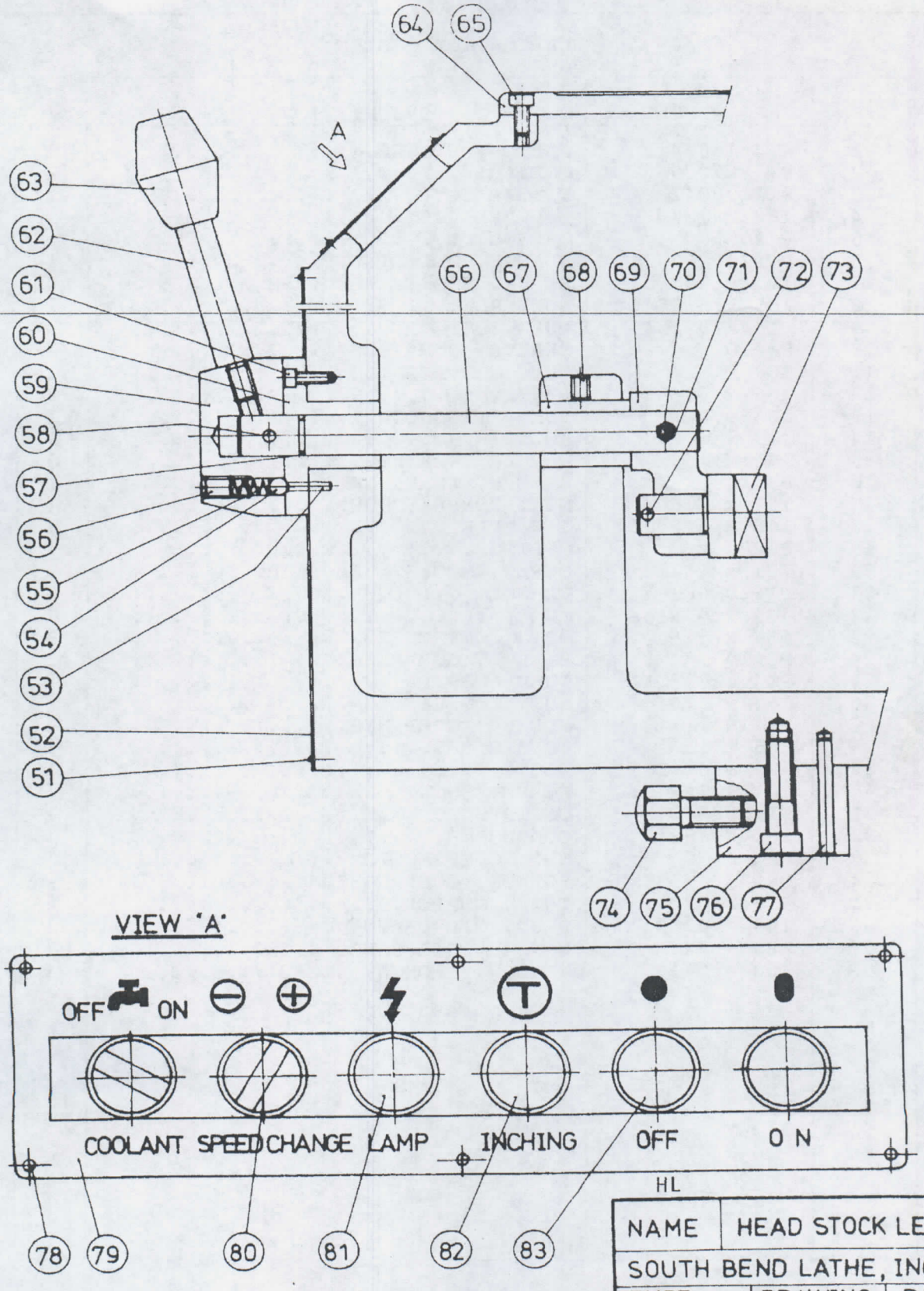

HL

NAME	HEAD STOCK LEVER	
SOUTH BEND LATHE, INC.		
TYPE	DRAWING	DATE
SBL 400	P. G. J.	1983. 1

400 LUBRICATION SYSTEM LS

ITEM	PART NUMBER	DESCRIPTION	Q'TY
1	PT4616024 F	SCREEN, FILTER.....	1
2	PT1802070 F	COLLAR.....	1
3	PT1202042 F	FILTER.....	1
4	165 x 1214	L-NIPPLE.....	1
5	P 20	O-RING.....	1
6	PT2202062 F	FLANGE, OIL LINE.....	1
7	101 x 1412	SCREW, SOCKET HEAD CAP.....	2
8	165 x 516516	L-NIPPLE.....	1
9	PT4422021 F	TUBE, COPPER.....	1
10	PB 10	SLEEVE, COMPRESSION.....	1
11	167 x 516	NUT, COMPRESSION.....	1
12	165 x 516516	L-NIPPLE.....	2
13	1RA - 2F	PUMP, TROCHOID.....	1
14	119 x 142	BOLT, HEX.....	3
15	143 x 14	WASHER, SPRING.....	3
16	PB 10	SLEEVE, COMPRESSION.....	1
17	167 x 516	NUT, COMPRESSION.....	1
18	165 x 516516	L-NIPPLE.....	1
19	P 20	O-RING.....	1
20	101 x 1412	SCREW, SOCKET HEAD CAP.....	2
21	PT2202061 F	FLANGE, OIL LINE.....	1
22	165 x 516516	L-NIPPLE.....	1
23	167 x 516	NUT, COMPRESSION.....	1
24	PB 10	SLEEVE, COMPRESSION.....	1
25	PT4422022 F	TUBE, COPPER.....	1
26	165 x 516	NUT, COMPRESSION.....	1
27	PB 10	SLEEVE, COMPRESSION.....	1
28	165 x 18	CONNECTOR.....	1
29	190 - 01 D	PLUG.....	1
30	101 x 141	SCREW, SOCKET HEAD CAP.....	1
31	PT1208043 F	DISTRIBUTOR.....	1
32	165 x 18	CONNECTOR.....	1
33	PAN 4	NUT, COMPRESSION.....	1
34	PB 4	SLEEVE, COMPRESSION.....	1
35	PT4422020 F	TUBE, COPPER.....	1
36	190 - 02 D	PLUG, OIL DRAIN.....	1
37	180 - 02 A	WINDOW, OIL LEVEL SIGHT.....	1
38	180 - 01 A	WINDOW, FLOW BY SIGHT.....	1

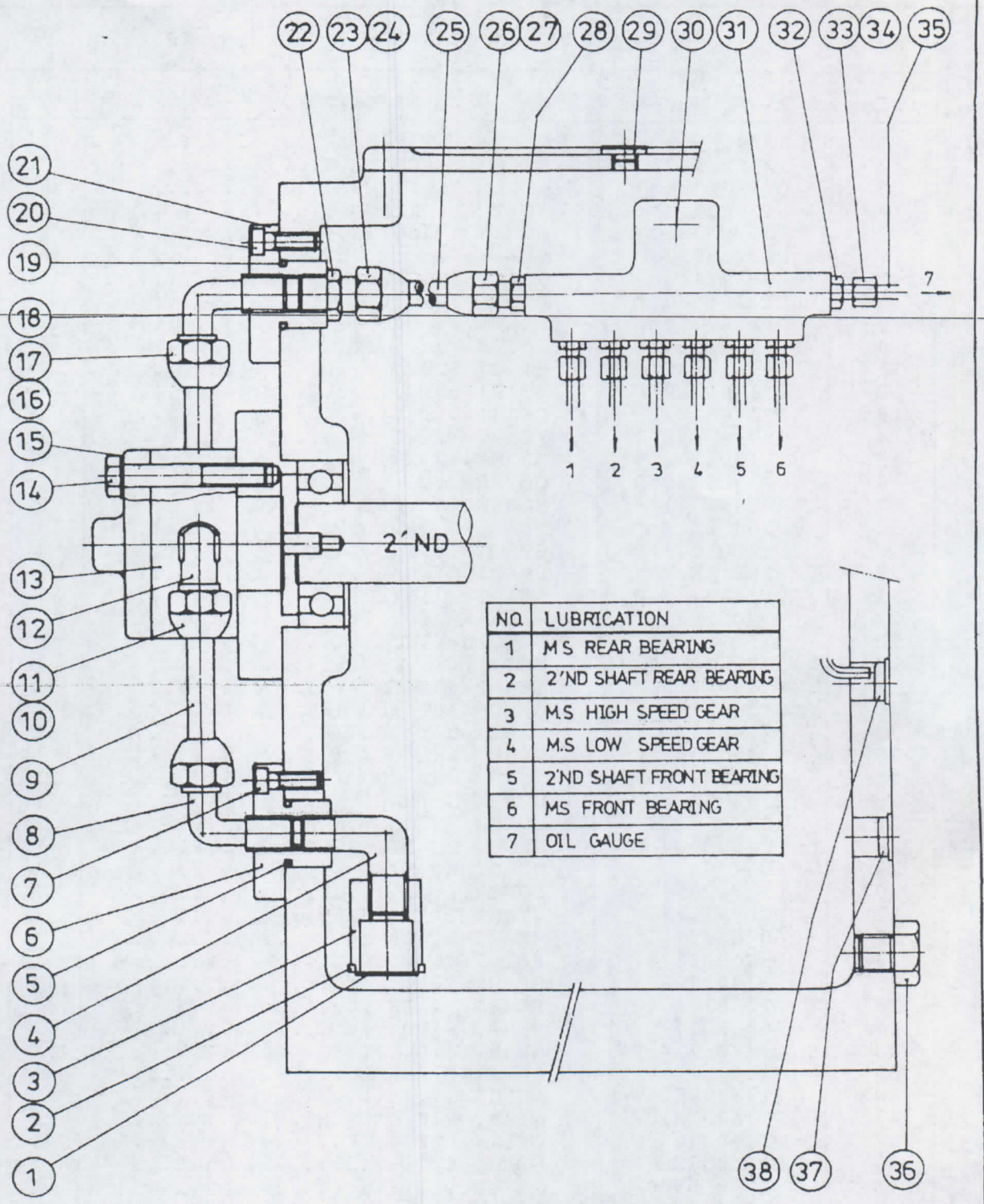

NO.	LUBRICATION
1	M.S REAR BEARING
2	2'ND SHAFT REAR BEARING
3	M.S HIGH SPEED GEAR
4	M.S LOW SPEED GEAR
5	2'ND SHAFT FRONT BEARING
6	M.S FRONT BEARING
7	OIL GAUGE

LS

NAME	LUBRICATION DEVICE	
SOUTH BEND LATHE, INC.		
TYPE	DRAWING	DATE
SBL 400	P. G. J.	1983. 1

400 FEEDBOX GEAR ASS'Y FG

ITEM	PART NUMBER	DESCRIPTION	Q'TY
1	PT2402031 F	PLATE, SWITCH ATT.....	1
2	121 x 1458	SCREW, MACHINE.....	3
3	PT1702056 F	COVER, SWITCH.....	1
4	Z15 G09	SWITCH, MICRO.....	2
5	123 x 3162	SCREW, MACHINE.....	2
6	PT2705010 F	CAM.....	1
7	103 x 1438	SCREW, SOCKET HEADLESS SET...	2
8	PT1105006 F	BODY, FEED BOX.....	1
~~9~~	~~PT1302113 F~~	~~SHAFT, 7'TH.....~~	~~1~~
10	PT1702055 F	COVER.....	1
11	561 x 45	RING, STOP.....	1
12	PT1403120 F	GEAR, 52T.....	1
13	PT1403121 F	GEAR, 44T.....	1
14	557 x 778	KEY.....	1
15	PT1303108 F	SHAFT, 2'ND.....	1
16	PT1505038 F	COVER.....	1
17	101 x 1412	SCREW, SOCKET HEAD CAP.....	2
18	6204 ZZ	BEARING, BALL.....	1
19	PT1802071 F	SPACER.....	1
20	6205 ZZ	BEARING, BALL.....	1
21	PT1403116 F	SHAFT, 1'ST.....	1
22	PT2002021 F	WASHER.....	1
23	125 x 58	NUT, HEX.....	1
24	557 x 6620	KEY.....	1
25	PT1401145 F	GEAR, 45T CHG (STD).....	1
25-1	PT1401149 F	GEAR, 48T CHG (STD, MODULE)..	1
25-2	PT1401148 F	GEAR, 53T CHG (D.P).....	1
25-3	PT1401147 F	GEAR, 46T CHG (11 1/2 T.P.I).	1
25-4	PT1401146 F	GEAR, 42T CHG (21 T.P.I).....	1
26	6205 ZZ	BEARING, BALL.....	1
27	101 x 1434	SCREW, SOCKET HEAD CAP.....	3
28	PT1505037 F	CASE, BEARING.....	1
29	6004	BEARING, BALL.....	1
30	PT1702053 F	COVER.....	1
31	PT1403122 F	GEAR, 3'RD SHAFT.....	1
32	6004	BEARING, BALL.....	1
34	557 x 5578	KEY.....	1
35	PT1403123 F	GEAR.....	1
36	PT1301110 F	SHAFT, 4'TH.....	1
37	561 x 17	RING, STOP.....	1
38	PT1403124 F	GEAR.....	1
39	6203	BEARING, BALL.....	1
40	PT1607012 F	BUSHING.....	1
41	PT1403131 F	GEAR, 32T CLUTCH.....	1
42	PT1403125 F	GEAR, 20T.....	1
43	PT1403126 F	GEAR, 22T.....	1
44	557 x 5540	KEY.....	1
45	PT3301010 F	CLUTCH.....	1
46	PT1403127 F	GEAR, 24T.....	1
47	PT1403128 F	GEAR, 26T.....	1

400 FEEDBOX GEAR ASS'Y FG

ITEM	PART NUMBER	DESCRIPTION	Q'TY
48	PT1303129 F	GEAR, 28T	1
49	PT1403130 F	GEAR, 32T	1
50	PT2505039 F	SHIFTER	1
51	PT1607013 F	BUSHING	1
52	PT1403132 F	GEAR, 16T CLUTCH	1
53	6203	BEARING, BALL	1
54	6203	BEARING, BALL	1
55	561 x 17	RING, STOP	1
56	PT1403133 F	GEAR, 42T CLUTCH	1
57	557 x 4435	KEY	1
58	PT2505038 F	SHIFTER	1
59	PT1301111 F	SHAFT, 5'TH	1
60	PT1802072 F	SPACER	1
61	51107	BEARING, THRUST BALL	1
62	PT1302116 F	SHAFT, 10'TH	1
63	103 x 51638	SCREW, SOCKET HEADLESS SET	1
64	PT1605014 F	BUSHING, FLANGED	1
65	51107	BEARING, THRUST BALL	1
66	PT1802073 F	SPACER	1
67	AW 05	WASHER, LOCK	1
68	AN 05	NUT, LOCK	1
69	PT1505039 F	COVER	1
70	101 x 141	SCREW, SOCKET HEAD CAP	3
71	PT2907032 F	PIN, SHEAR	1
72	PT1301136 F2	SCREW, LEAD (30" BETWEEN CTRS)	1
72-1	PT1301137 F2	SCREW, LEAD (40" BETWEEN CTRS)	1
73	PT1607020 F	BUSHING	1
74	159 x 516	OILER	1
75	PT2205084 F	BRACKET, SUPPORT	1
76	101 x 38112	SCREW, SOCKET HEAD CAP	1
77	551 x 640	PIN, TAPER	2
78	101 x 316916	SCREW, SOCKET HEAD CAP	4
79	PT1607015 F	RING, CLUTCH	1
80	PT2201063 F	COUPLING	1
81	PT1701054 F	COVER, SLIP CLUTCH	1
82	101 x 316916	SCREW, SOCKET HEAD CAP	4
83	157 x 516	BALL, STEEL	4
84	SP0775018	SPRING	4
85	103 x 38516	SCREW, SOCKET HEADLESS SET	8
86	PT3301011 F	CLUTCH	1
87	PT1302138 F	ROD, FEED (39" BETWEEN CTRS)	1
87-1	PT1302139 F	ROD, FEED (40" BETWEEN CTRS)	1
88	PT1907044 F	BUSHING	1
89	PT1403118 F	GEAR	1
90	PT1707052 F	COVER	1
91	103 x 1412	SCREW, SOCKET HEADLESS SET	1
92	PT1407117 F	GEAR, TUMBLER	1
93	PT1801074 F	SPACER	1
94	6204	BEARING, BALL	2
95	557 x 5525	KEY	1
96	PT1403134 F	GEAR	1

400 FEEDBOX GEAR ASS'Y FG

ITEM	PART NUMBER	DESCRIPTION	Q'TY
97	561 x 22	RING, STOP.....	1
98	PT1505040 F	COVER.....	1
99	101 x 141	SCREW, SOCKET HEAD CAP.....	3
100	6204	BEARING, BALL.....	1
101	553 x 530	PIN, SPRING.....	1
102	PT1301112 F	SHAFT, 6'TH.....	1
103	553 x 530	PIN, SPRING.....	1
104	159 x 516	OILER.....	1
105	PT1702064 F	COVER, SUPPORT BRACKET.....	1
106	523 x 56	SCREW, MACHINE.....	6
107	PT1302140 F	ROD, SWITCH (30" BETWEEN CTRS)..	1
107-1	PT1302141 F	ROD, SWITCH (40" BETWEEN CTRS)..	1
108	553 x 530	PIN, SPRING.....	1
109	PT3202010 F	COUPLING.....	1
110	553 x 530	PIN, SPRING.....	1
111	103 x 381	SCREW, SOCKET HEADLESS SET.....	1
112	PT1302115 F	SHAFT, 9'TH.....	1
113	523 x 356	SCREW, MACHINE.....	2
114	170 - 56F F2	PLATE, NAME.....	1
115	SP1212050	SPRING.....	1
116	PT2901033 F	PIN, INDEXING.....	1
117	160 - 04 C	GRIP, HANDLE.....	1
118	PT1702077 F	COVER.....	1
119	119 x 381	BOLT, HEX.....	2
120	103 x 381	SCREW, SOCKET HEADLESS SET.....	1
121	PT2705011 F	CAM.....	1
122	PT1302114 F	SHAFT, 8'TH.....	1
123	103 x 3834	SCREW, SOCKET HEADLESS SET.....	1
124	PT2505037 F	LINK.....	1
125	PT2901034 F	PIN.....	1
126	103 x 1414	SCREW, SOCKET HEADLESS SET.....	1
127	PT1301109 F	SHAFT.....	1
128	6001 ZZ	BEARING, BALL.....	1
129	PT1403119 F	GEAR.....	1
130	PT1407135 F	GEAR, SHIFTING.....	1
131	103 x 1414	SCREW, SOCKET HEADLESS SET.....	1
132	551 x 4850	PIN, TAPER.....	1
133	PT2506036 F	SHIFTER.....	1
134	103 x 1438	SCREW, SOCKET HEADLESS SET.....	1
135	PT1802075 F	COLLAR.....	1

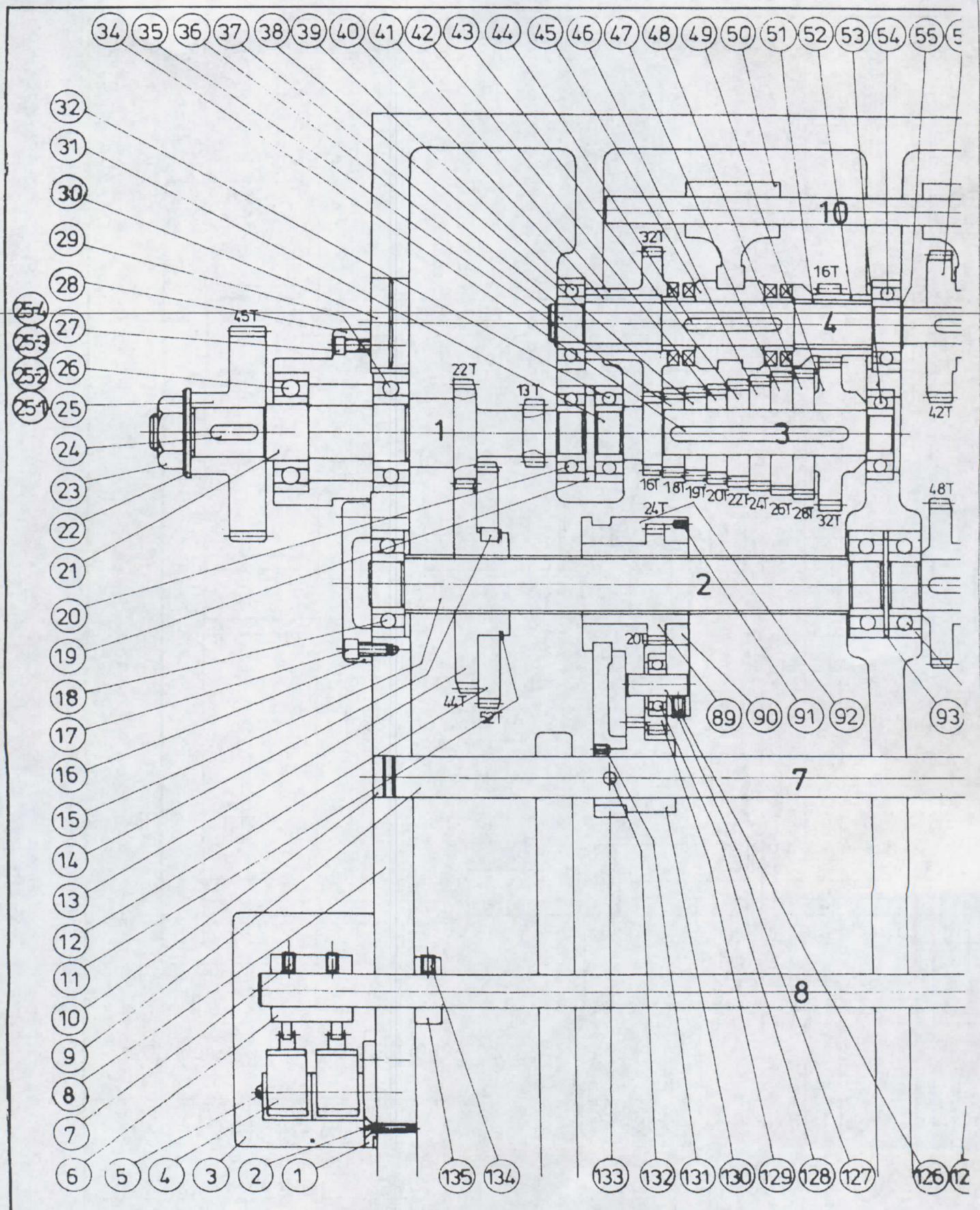
34 35 36 37 38 39 40 41 42 43 44 45 46 47 48 49 50 51 52 53 54 55
32 31 30 29 28 27 26 25 24 23 22 21 20 19 18 17 16 15 14 13 12 11 10 9 8 7 6 5 4 3 2 1
25-4 25-3 25-2 25-1
135 134 133 132 131 130 129 128 127 126
89 90 91 92 93
10
4
3
1
2
7
8
45T
22T
13T
32T
16T
42T
48T
24T
20T
44T
52T
16T 18T 19T 20T 22T 24T 26T 28T 32T

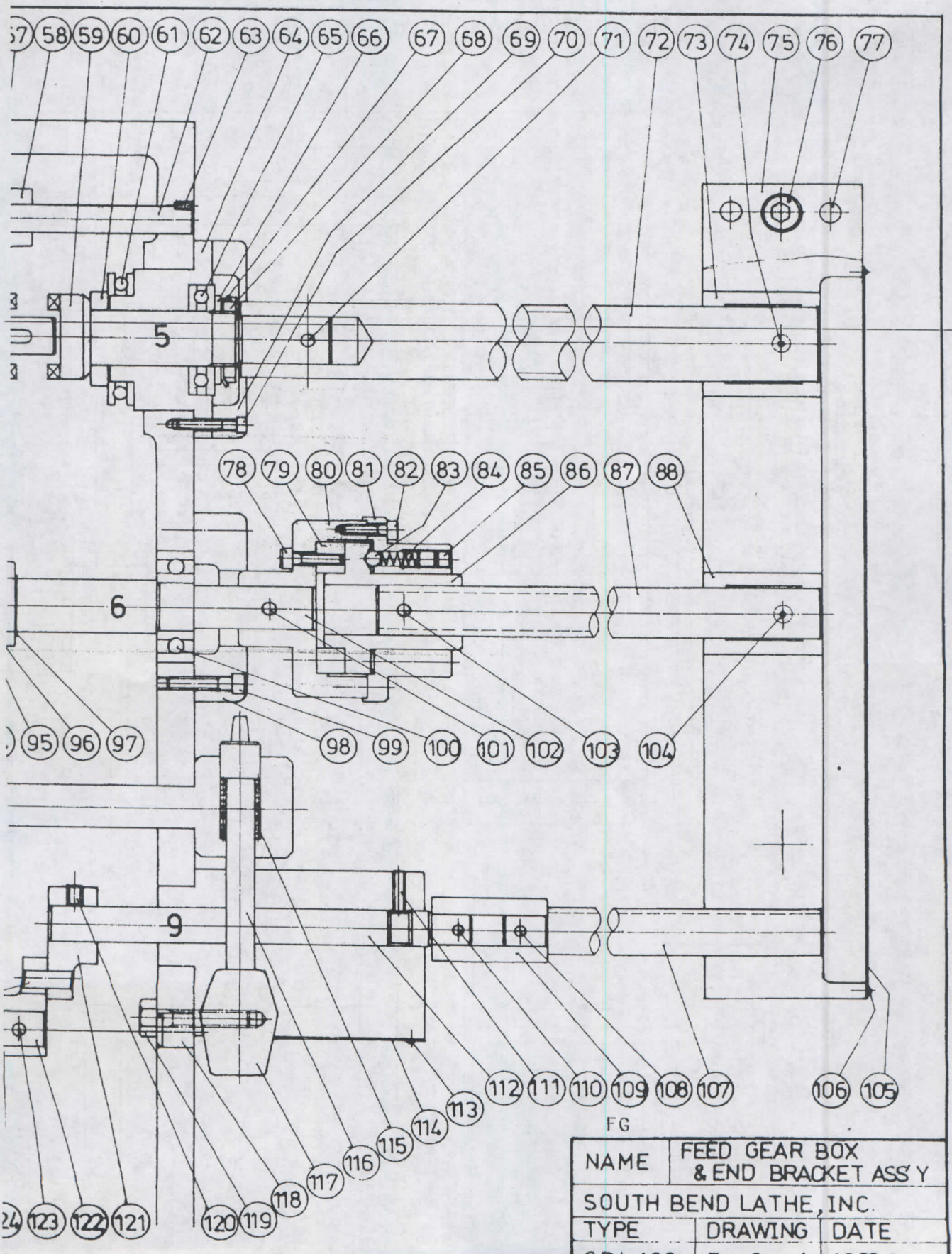

NAME	FEED GEAR BOX & END BRACKET ASS'Y	
SOUTH BEND LATHE, INC.		
TYPE	DRAWING	DATE
SBL 400	P. G. J.	1983.1

400 FEEDBOX LEVER ASS'Y FL

ITEM	PART NUMBER	DESCRIPTION	Q'TY
1	101 x 38212	SCREW, SOCKET HEAD CAP.....	4
2	17 D-24F2-IE	PLATE, NAME.....	1
3	523 x 356	SCREW, MACHINE.....	8
4	160 - 04 C	GRIP, HANDLE.....	1
5	PT2302022 F	LEVER.....	1
6	101 x 31612	SCREW, SOCKET HEAD CAP.....	2
7	PT1902035 F	BUSHING, FLANGED.....	1
8	553 x 550	PIN, SPRING.....	1
9	PT1302116 F	SHAFT,10'TH	1
10	553 x 530	PIN, SPRING.....	1
11	103 x 51638	SCREW, SOCKET HEADLESS SET.....	1
12	SP0806030	SPRING.....	1
13	157 x 14	BALL, STEEL.....	1
14	PT2102022 F	BOSS, HANDLE.....	1
15	PT2205065 F	ROD, CONNECTING.....	1
16	PT2902035 F	PIN.....	1
17	PT2902036 F	BOLT, SHOULDER.....	1
18	PT3005010 F	ROD, PIVOT CONNECTING.....	1
19	561 x 10	RING, STOP.....	1
20	PT2507040 F	SHOE, SHIFTING.....	1
21	101 x 141	SCREW, SOCKET HEAD CAP.....	6
22	PT1705057 F	COVER.....	1
23	PT1302118 F	SHAFT.....	1
24	101 x 31612	SCREW, SOCKET HEAD CAP.....	2
25	PT1902036 F	BUSHING, FLANGED.....	1
26	553 x 550	PIN, SPRING.....	1
27	PT2102022 F	BOSS, HANDLE.....	1
28	PT2302022 F	LEVER.....	1
29	160 - 04 C	GRIP, HANDLE.....	1
30	103 x 51638	SCREW, SOCKET HEADLESS SET.....	1
31	SP0806030	SPRING.....	1
32	157 x 14	BALL, STEEL.....	1
33	553 x 530	PIN, SPRING.....	1
34	PT2505041 F	ROD, CONNECTING.....	1
35	PT2502042 F	SHOE, SHIFTING.....	1
36	PT1302118 F	SHAFT.....	1
37	101 x 31612	SCREW, STOCKET HEAD CAP.....	2
38	PT1902030 F	BUSHING, FLANGED.....	1
39	553 x 550	PIN, SPRING.....	1
40	PT2102022 F	BOSS, HANDLE.....	1
41	PT2302022 F	LEVER.....	1
42	160 - 04 C	GRIP, HANDLE.....	1
43	103 x 51638	SCREW, SOCKET HEADLESS SET.....	1
44	SP1206030	SPRING.....	1
45	157 x 14	BALL, STEEL.....	1
46	553 x 530	PIN, SPRING.....	1
47	PT2505041 F	ROD, CONNECTING.....	1
48	PT2502042 F	SHOE, SHIFTING.....	1

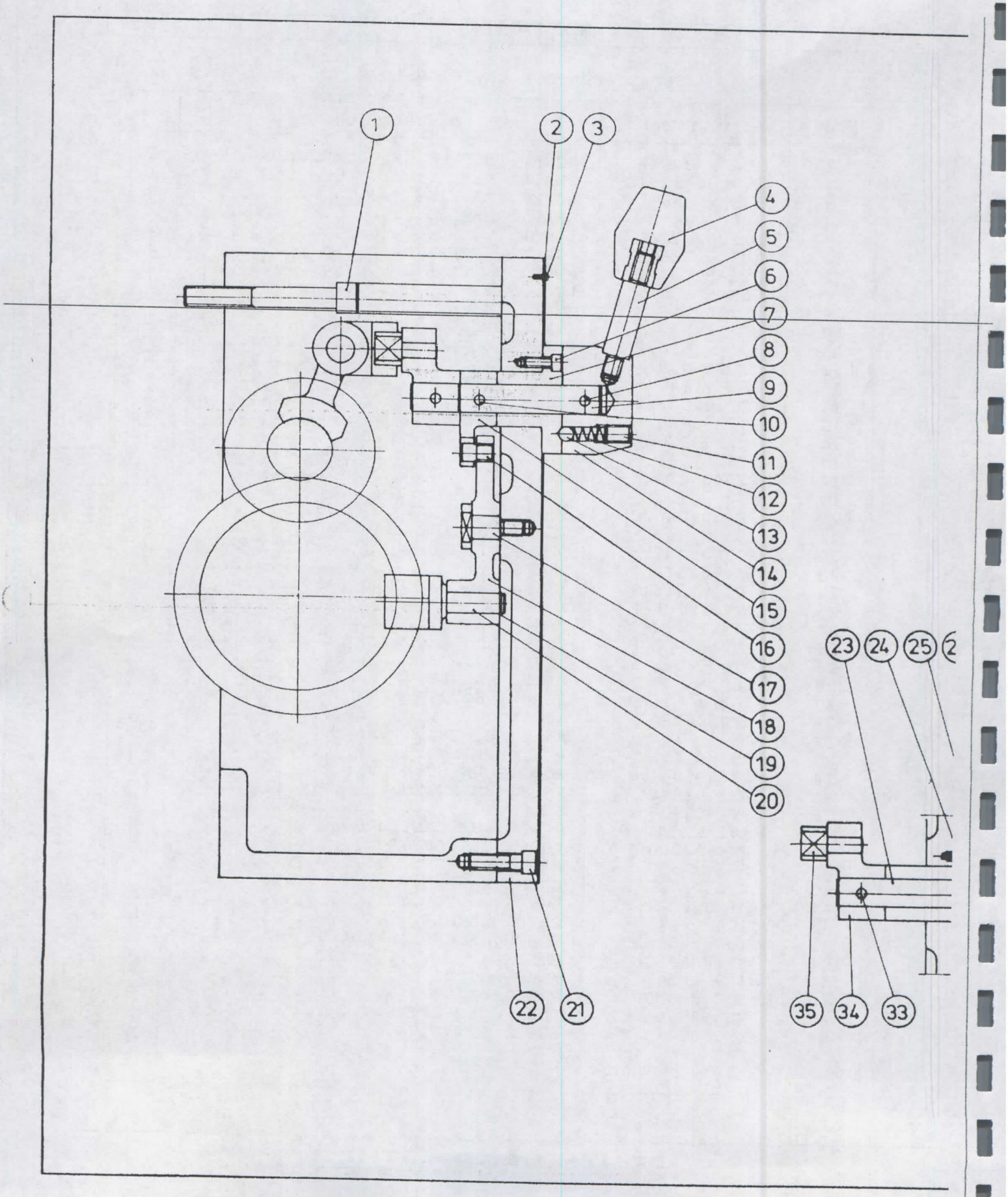
1
2
3
4
5
6
7
8
9
10
11
12
13
14
15
16
17
18
19
20
21
22
23
24
25
33
34
35

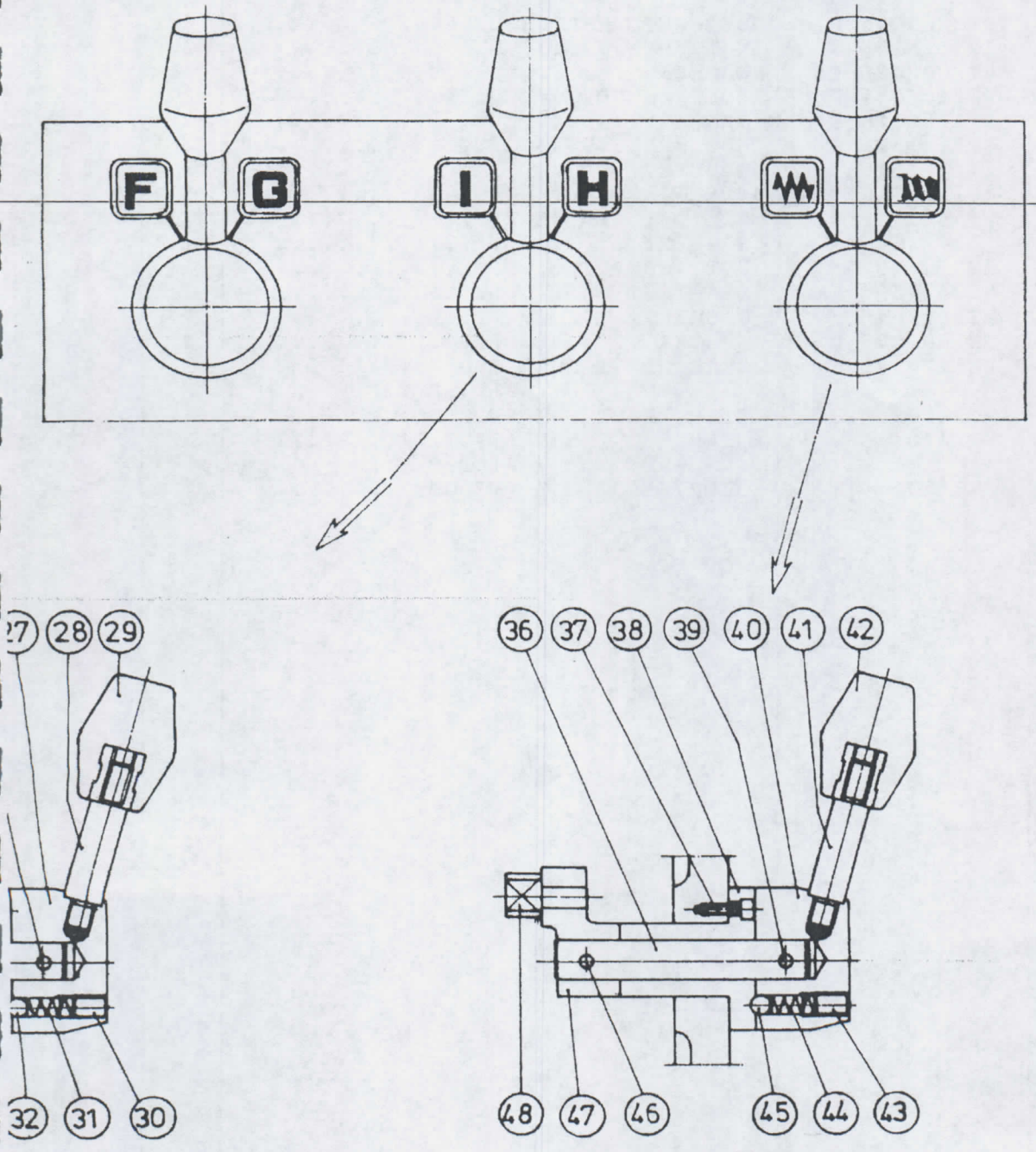

FL

NAME	FEED GEAR BOX LEVER ASSEMBLY	
SOUTH BEND LATHE, INC.		
TYPE	DRAWING	DATE
SBL 400	P. G. J.	1983.1

400 CHANGE GEAR ASS'Y CG

ITEM	PART NUMBER	DESCRIPTION	Q'TY
1	PT2205066 F	BRACKET, CHANGE GEAR.....	1
2	125 x 58	NUT, HEX.....	1
3	PT2002021 F	WASHER.....	1
4	PT2802041 F	BOLT, STUD.....	1
5	PT1802076 F	SPACER.....	1
6	125 x 516	NUT, HEX.....	3
7	141 x 516	WASHER.....	3
8	101 x 51678	SCREW, SOCKET HEAD CAP.....	3
9	PT1301119 F	BOLT, IDLER GEAR.....	1
10	141 x 58	WASHER.....	1
11	125 x 58	NUT, HEX.....	1
12	6204 ZZ	BEARING, BALL.....	2
13	PT1802078 F	WASHER.....	1
14	PT1802077 F	SPACER.....	1
15	PT1420141 F	GEAR, 127T CHG (STD, D.P,11 1/2 21 T.P.I.)	1
15-1	PT1420142 F	GEAR, 108T CHG (MODULE).....	1
16	PT1420143 F	GEAR, 120T CHG (STD, D.P,11 1/2 21 T.P.I.)	1
16-1	PT1420144 F	GEAR, 110T CHG (MODULE).....	1

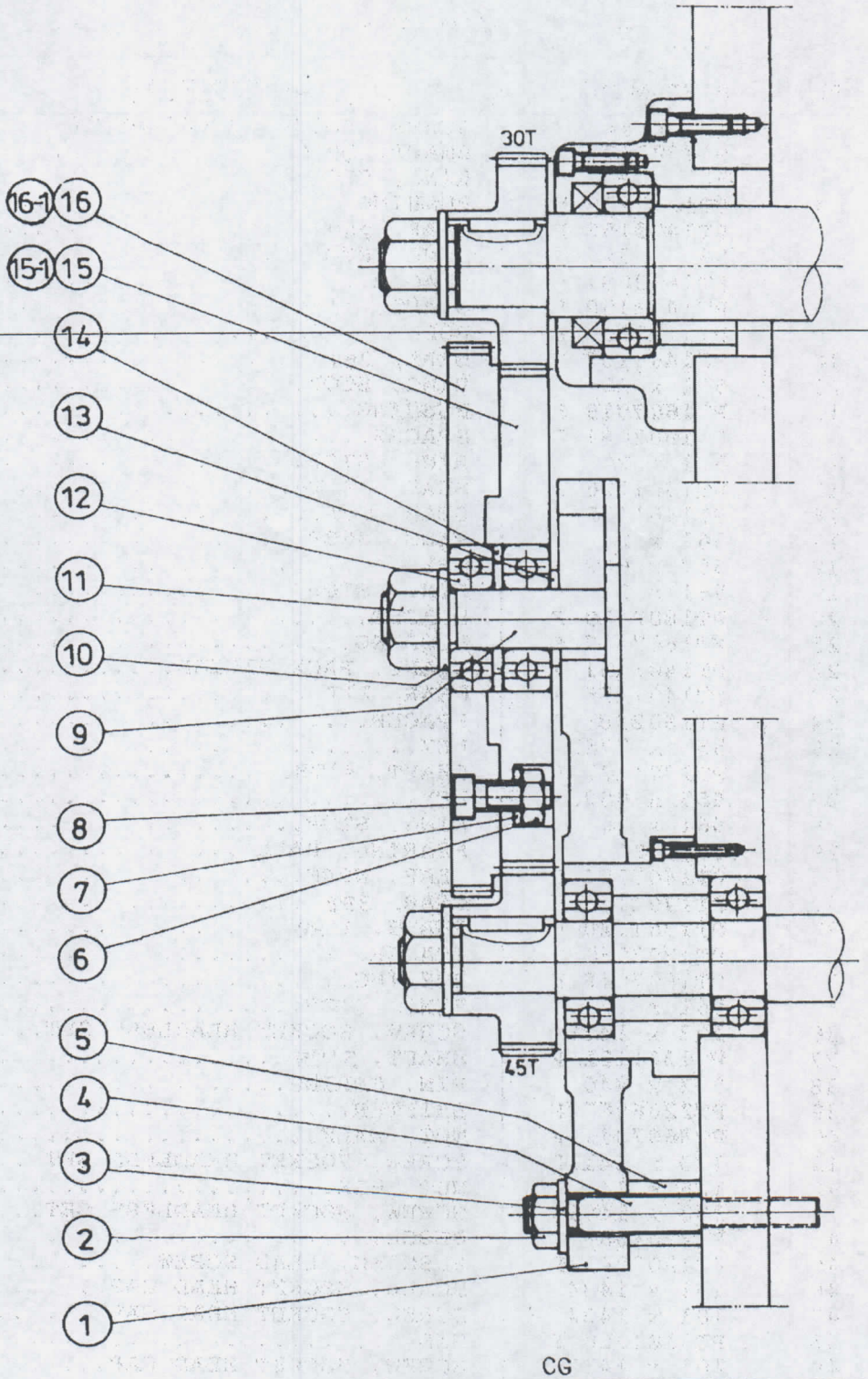

CG

NAME	CHANGE GEAR ASS'Y	
SOUTH BEND LATHE, INC.		
TYPE	DRAWING	DATE
SBL 400	P. G. J.	82.12.

400 APRON GEAR ASS'Y AG

ITEM	PART NUMBER	DESCRIPTION	Q'TY
1	103 x 141	SCREW, SOCKET HEADLESS SET.....	1
2	PT1301126 F	SHAFT, 10'TH.....	1
3	561 x 20	RING, STOP.....	2
4	PT1607019 F	BUSHING.....	1
5	PT1401158 F	GEAR, 26T.....	1
6	561 x 35	RING, STOP.....	1
7	PT1802081 F	SPACER.....	2
8	PT1401150 F	SHAFT, 1'ST	1
9	PT1105007 F2	BODY, APRON.....	1
10	PT1401158 F	GEAR, 26T	1
11	561 x 35	RING, STOP.....	1
12	PT1607019 F	BUSHING.....	1
13	PT1802081 F	SPACER.....	1
14	561 x 20	RING, STOP.....	1
15	PT1301126 F	SHAFT, 9'TH.....	1
16	PT1401152 F	GEAR, 60T.....	1
17	561 x 20	RING, STOP.....	1
18	557 x 6620	KEY.....	1
19	561 x 25	RING, STOP.....	1
20	PT1802079 F	SPACER.....	1
21	PT1607017 F	BUSHING.....	1
22	PT1401151 F	SHAFT, RACK PINION.....	1
23	PT1401155 F	GEAR, 21T.....	1
24	PT1802081 F	SPACER.....	1
25	557 x 7755	KEY.....	1
26	PT1301121 F	SHAFT, 4'TH.....	1
27	557 x 5520	KEY.....	1
28	561 x 20	RING, STOP.....	1
29	6004 ZZ	BEARING, BALL.....	1
30	PT1407154 F	GEAR, WORM.....	1
31	PT1401153 F	GEAR, 38T	1
32	PT1301120 F	SHAFT, 3'RD	1
33	PT1802080 F	SPACER.....	1
34	PT1607018 F	BUSHING.....	1
35	561 x 20	RING, STOP.....	1
36	103 x 1438	SCREW, SOCKET HEADLESS SET.....	1
37	PT1301122 F	SHAFT, 5'TH	1
38	553 x 440	PIN, SPRING.....	1
39	PT2206067 F	SHIFTER.....	1
40	PT3607011 F	NUT, HALF.....	1
41	103 x 14112	SCREW, SOCKET HEADLESS SET.....	2
42	125 x 14	NUT, HEX.....	2
43	103 x 14516	SCREW, SOCKET HEADLESS SET.....	2
44	PT2201068 F	BLOCK.....	2
45	PT1907041 F	BUSHING, LEAD SCREW.....	1
46	101 x 1434	SCREW, SOCKET HEAD CAP.....	2
47	101 x 1434	SCREW, SOCKET HEAD CAP.....	3
48	PT3101020 F	GIB.....	1
49	101 x 14112	SCREW, SOCKET HEAD CAP.....	3
50	125 x 14	NUT, HEX.....	3

400 APRON GEAR ASS'Y AG

ITEM	PART NUMBER	DESCRIPTION	Q'TY
51	PT2901037 F	PIN.....	2
52	PT1301124 F	SHAFT, 7'TH	1
53	553 x 540	PIN, SPRING.....	1
54	PT2702012 F	CAM.....	1
55	101 x 1412	SCREW, SOCKET HEAD CAP.....	3
56	160 - 04 C	GRIP, HANDLE.....	1
57	PT2302020 F	LEVER.....	1
58	PT2102023 F	BOSS, HANDLE.....	1
59	553 x 660	PIN, SPRING.....	1
60	PT1902046 F	BUSHING, FLANGED.....	1
61	157 x 14	BALL, STEEL.....	1
62	SP0806025	SPRING.....	1
63	103 x 51638	SCREW, SOCKET HEADLESS SET.....	1
64	170 - 58FF2	PLATE, HALF NUT NAME.....	1
65	PT4302020 F	KNOB.....	1
66	553 x 14	PIN, SPRING.....	1
67	157 x 14	BALL, STEEL.....	1
68	SP1206020	SPRING.....	1
69	103 x 51638	SCREW, SOCKET HEADLESS SET.....	1
70	170 - 62 FF2	PLATE, NAME.....	1
71	101 x 1412	SCREW, SOCKET HEAD CAP.....	1
73	PT1702059 F	COVER.....	1
74	561 x 20	RING, STOP.....	1
75	6004 ZZNR	BEARING, BALL.....	1
76	101 x 1438	SCREW, SOCKET HEAD CAP.....	3
77	6003 ZZ	BEARING, BALL.....	1
78	PT1702058 F	COVER.....	1
79	561 x 17	RING, STOP.....	1
80	103 x 141	SCREW, SOCKET HEADLESS SET.....	1
81	101 x 1412	SCREW, SOCKET HEAD CAP.....	3
82	PT1602016 F	BUSHING, FLANGED.....	1
83	6003 ZZ	BEARING, BALL.....	1
84	561 x 17	RING, STOP.....	1
85	551 x 4845	PIN, TAPER.....	1
86	PT4005010 F	WHEEL, HANDLE.....	1
87	160 - 08 C	GRIP, HANDLE.....	1
88	PT1302035 S	SHAFT.....	1

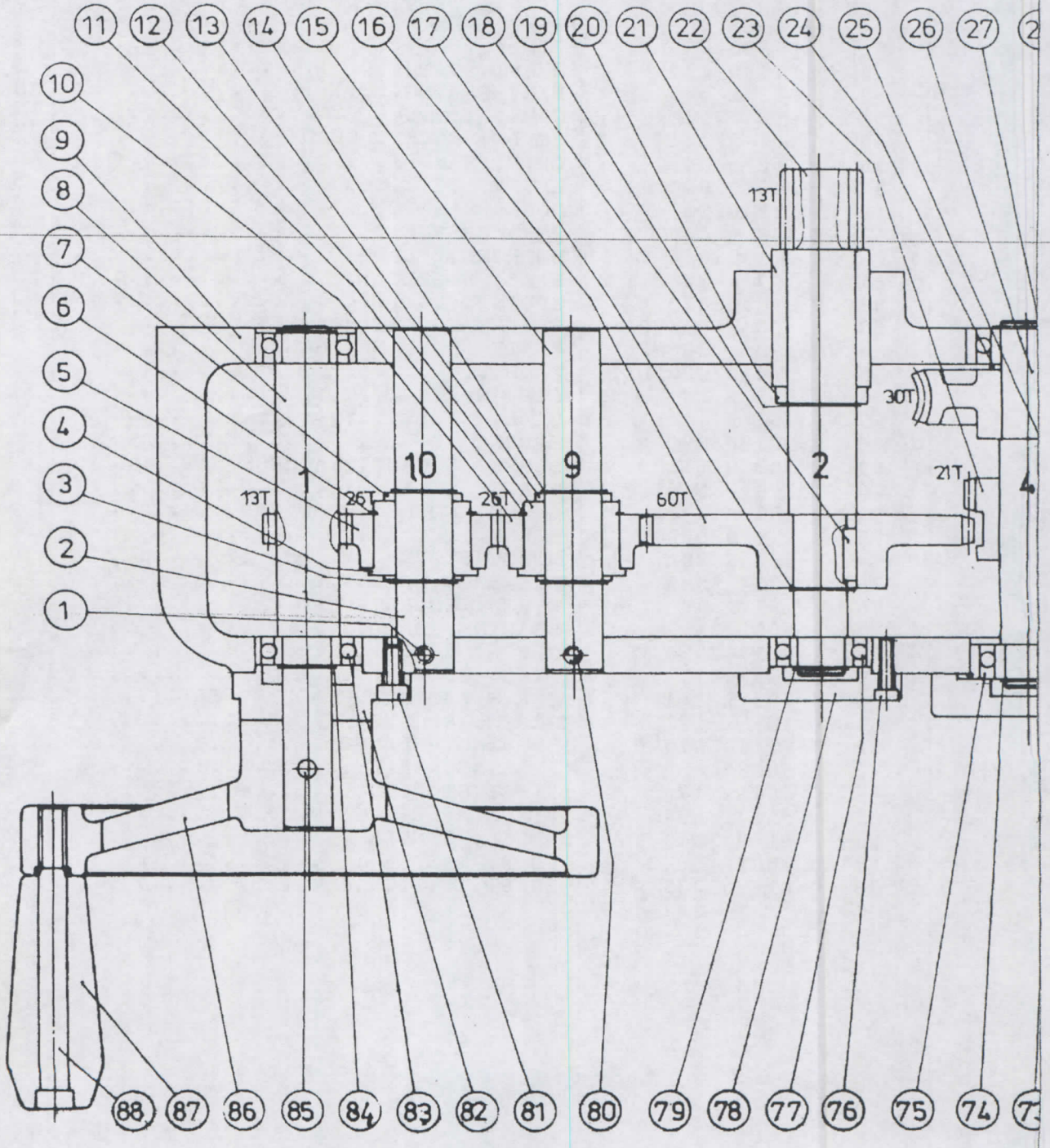
11
12
13
14
15
16
17
18
19
20
21
22
23
24
25
26
27
10
9
8
7
6
5
4
3
2
1
13T
26T
26T
60T
30T
21T
1
10
9
2
4
88
87
86
85
84
83
82
81
80
79
78
77
76
75
74

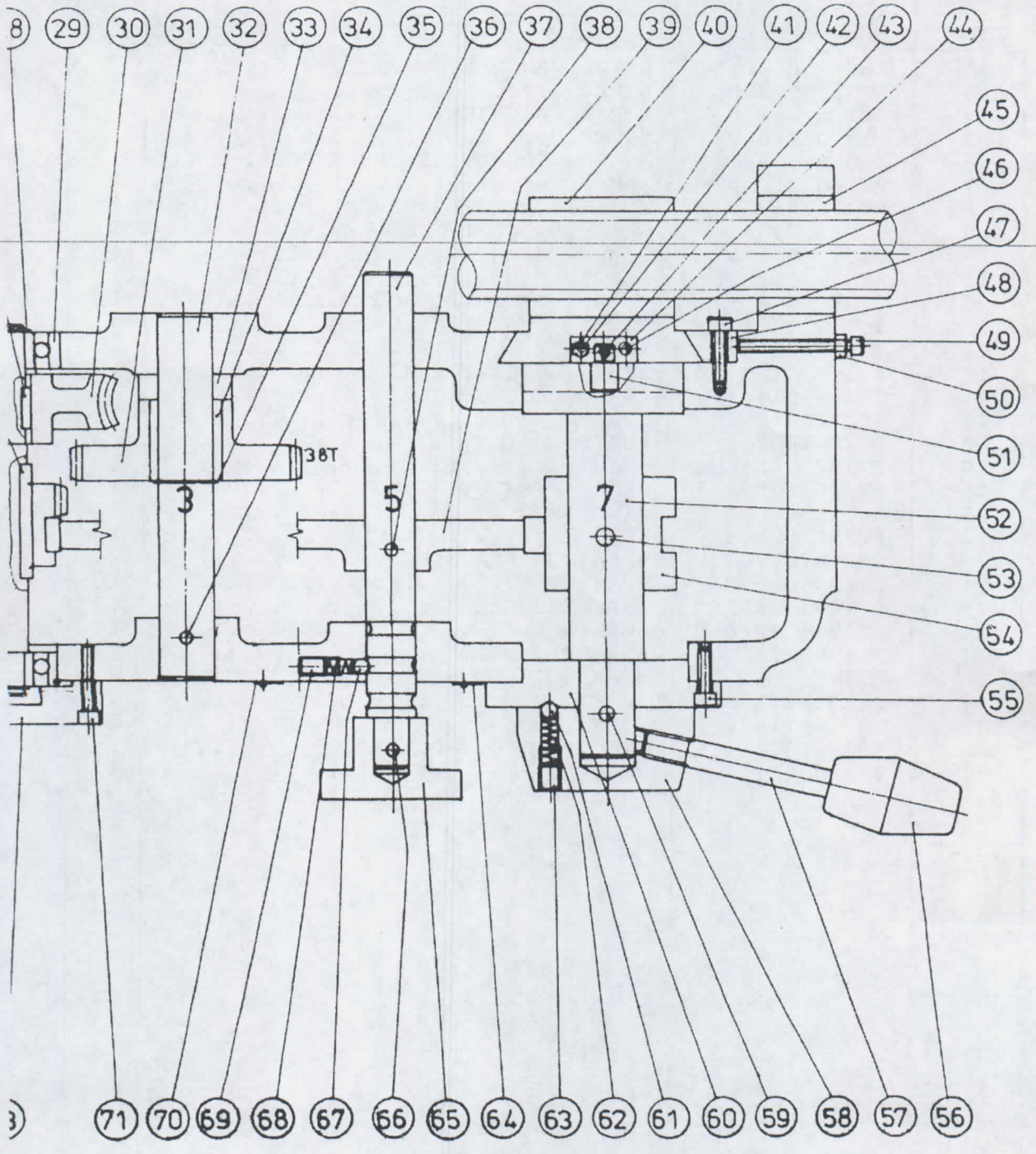

AG

NAME	APRON GEAR ASS'Y	
SOUTH BEND LATHE, INC.		
TYPE	DRAWING	DATE
SBL 400	P. G. J.	1983.1

400 APRON LEVER ASS'Y AL

ITEM	PART NUMBER	DESCRIPTION	Q'TY
1	160 - 04 C	GRIP, HANDLE.....	1
2	PT2302023 F	LEVER.....	1
4	523 x 46	SCREW, MACHINE.....	3
5	PT1702060 F	COVER.....	1
6	103 x 3834	SCREW, SOCKET HEADLESS SET.....	1
7	PT1301123 F2	SHAFT, 6'TH	1
8	PT1905037 F	HOUSING, CLUTCH LEVER.....	1
9	103 x 3834	SCREW, SOCKET HEADLESS SET.....	1
10	523 x 356	SCREW, MACHINE.....	4
11	170 - 60 FF2	PLATE, NAME.....	1
12	PT1705078 F	COVER, APRON BOTTOM.....	1
13	101 x 1434	SCREW, SOCKET HEAD CAP.....	4
14	125 x 14	NUT, HEX.....	1
15	101 x 1434	SCREW, SOCKET HEAD CAP.....	1
16	101 x 51634	SCREW, SOCKET HEAD CAP.....	2
17	ST1312034	SPRING.....	1
18	PT2401032 F	PLATE, GUIDE.....	1
19	PT1907040 F	BUSHING.....	1
20	PT1401157 F	GEAR, 20T.....	1
21	565 x 8	RING, STOP.....	1
22	PT2901038 F	KEY, "T".....	1
23	PT2907039 F	BUSHING, FLANGED.....	1
24	PT2205069 F	BRACKET.....	1
25	PT1401156 F	WORM AND GEAR.....	1
26	PT1907038 F	BUSHING.....	1
27	PT2205070 F	BRACKET, WORM.....	1
28	51104	BEARING, THRUST BALL.....	2
29	PT1301125 F	SHAFT.....	1
30	103 x 51638	SCREW, SOCKET HEADLESS SET.....	1
31	561 x 32	RING, STOP.....	1
32	PT1802082 F	SPACER.....	1

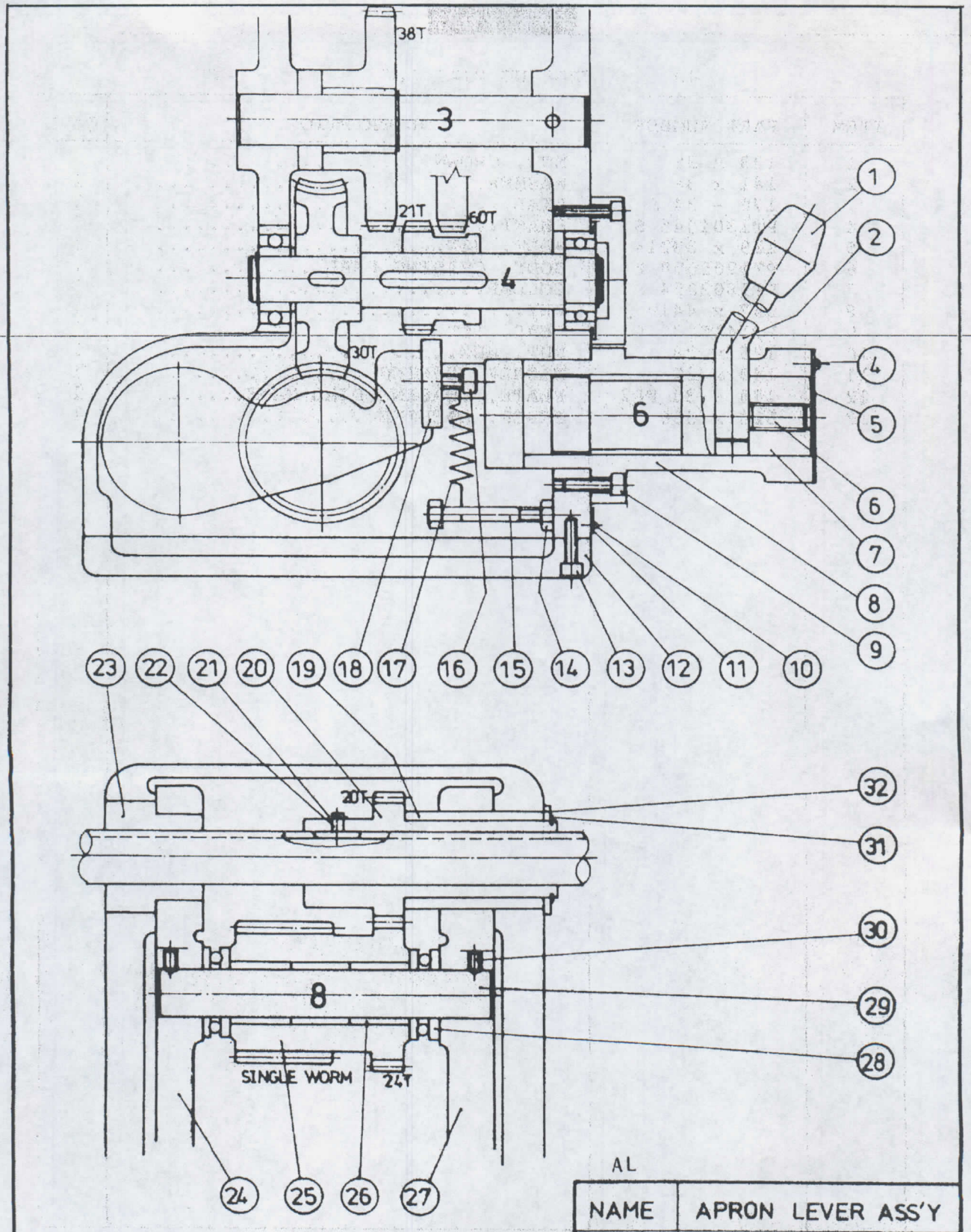

AL

NAME	APRON LEVER ASS'Y	
SOUTH BEND LATHE, INC.		
TYPE	DRAWING	DATE
SBL 400	P. G. J.	1983. 1

400 CHASING DIAL ASS'Y CD

ITEM	PART NUMBER	DESCRIPTION	Q'TY
1	133 x 38	NUT, CROWN.....	1
2	141 x 38	WASHER.....	1
3	170 - 34 S	DIAL.....	1
4	PT1301045 S	SHAFT.....	1
5	119 x 38214	BOLT, HEX.....	1
6	PT1205050 F	BODY, CHASING DIAL.....	1
7	PT1802054 S	COLLAR.....	1
8	557 x 4410	KEY.....	1
9	PT1416076 S	GEAR, 16T.....	1
10	125 x 38	NUT, HEX.....	1
11	143 x 38	WASHER, SPRING.....	1
12	170 - 30 FF2	PLATE, CHASING DIAL NAME.....	1
13	523 x 356	SCREW, MACHINE.....	1

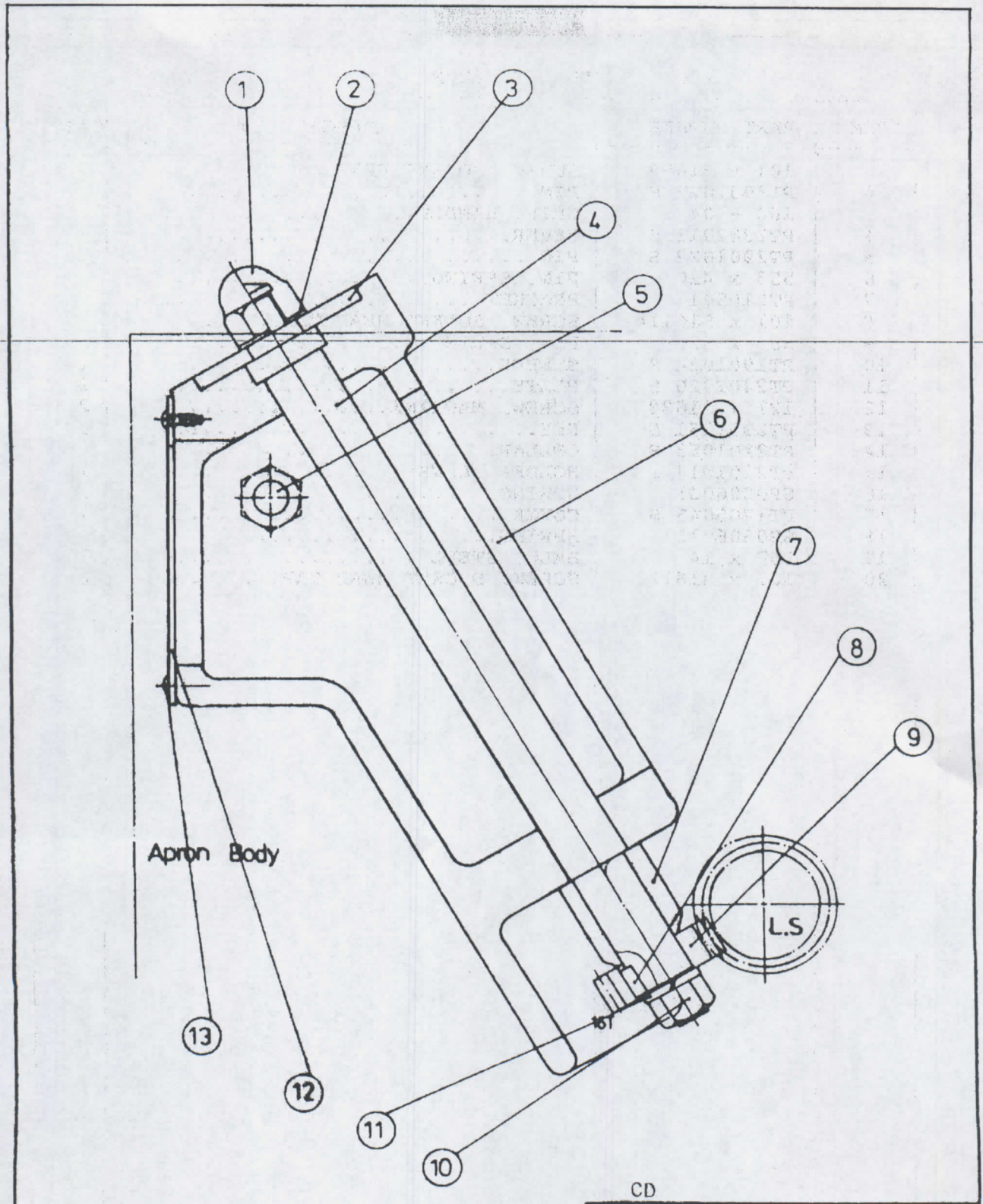

CD

NAME	CHASING DIAL ASSY	
SOUTH BEND LATHE, INC.		
TYPE	DRAWING	DATE
SBL400	C. J. K.	'83. 1

400 STARTING LEVER ASS'Y SL

ITEM	PART NUMBER	DESCRIPTION	Q'TY
1	101 x 31658	SCREW, SOCKET HEAD CAP.....	4
2	PT2901026 S	PIN.....	2
3	160 - 04 C	GRIP, HANDLE.....	1
4	PT2302011 S	LEVER.....	1
5	PT2901027 S	PIN.....	1
6	553 x 420	PIN, SPRING.....	3
7	PT2105013 S	BRACKET.....	1
8	101 x 516114	SCREW, SOCKET HEAD CAP.....	2
9	553 x 525	PIN, SPRING.....	2
10	PT1901024 S	SLEEVE.....	1
11	PT2402020 S	PLATE.....	1
12	121 x 31638	SCREW, MACHINE.....	2
13	PT2901161 S	KEY.....	1
14	PT2201053 S	COLLAR.....	1
15	PT2101014 S	HOLDER, LEVER.....	1
16	SP0806035	SPRING.....	1
17	PT1705045 S	COVER.....	1
18	SP0806012	SPRING.....	1
19	157 x 14	BALL, STEEL.....	1
20	101 x 31612	SCREW, SOCKET HEAD CAP.....	2

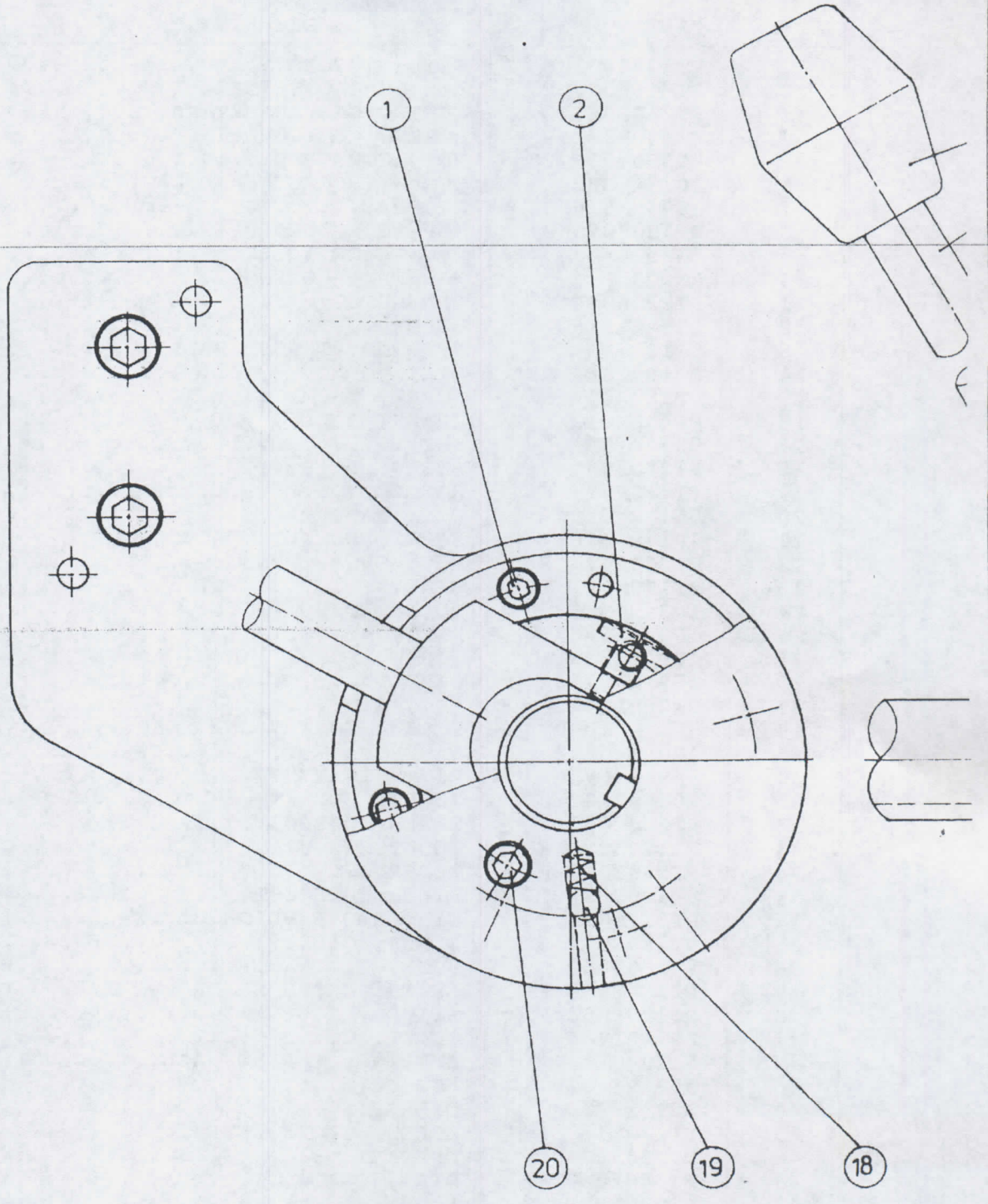
1
2
20
19
18

400 CARRIAGE ASS'Y - ROUND TOOLPOST CA

ITEM	PART NUMBER	DESCRIPTION	Q'TY
1	PT1205052 F	SLIDE, CROSS.....	1
2	PT3105022 F	GIB, CROSS SLIDE.....	1
3	PT2802011 S	SCREW, GIB ADJUSTING.....	2
4	PT1301132 F2	SCREW, COMPOUND.....	1
5	PT3607013 F2	NUT, COMPOUND.....	1
6	101 x 3834	SCREW, SOCKET HEAD CAP.....	1
7	159 x 516	OILER.....	4
8	PT1205075 F	TOP, COMPOUND REST.....	1
9	AN 03	NUT, LOCK.....	1
10	AW 03	WASHER, LOCK NUT.....	1
11	PT2205080 F	BRACKET.....	1
12	159 x 516	OILER.....	1
13	51103	BEARING, THRUST BALL.....	1
14	PT1802086 F2	DIAL, GRAD.....	1
15	PT2802005 S	SCREW, THUMB.....	1
16	PT4002012 F	CRANK, BALL.....	1
17	557 x 5510	KEY.....	1
18	PT2802009 S	SCREW.....	1
19	PT4302026 F	HANDLE.....	1
20	551 x 630	PIN, TAPER.....	2
21	101 x 5161	SCREW, SOCKET HEAD CAP.....	2
22	PT3607012 F2	NUT, CROSS FEED.....	2
23	PT2901041 F	PIN.....	1
24	103 x 3838	BOLT, ADJUSTING.....	1
24-1	103 x 3834	BOLT, ADJUSTING.....	1
25	101 x 5161	SCREW, SOCKET HEAD CAP.....	2
26	159 x 516	OILER.....	3
27	PT2801042 F	NUT, "T".....	3
28	501 x 1080	SCREW, SOCKET HEAD CAP.....	2
29	190 - 01 D	PLUG.....	1
30	549 x 670	PIN, STRAIGHT.....	2
31	101 x 12212	SCREW, SOCKET HEAD CAP.....	4
32	PT2802062 F	SCREW,TOOLPOST.....	1
33	PT1201074 F	TOOLPOST.....	1
34	PT2401039 F	WEDGE.....	1
35	PT1802093 F	RING, TOOLPOST.....	1
36	PT3105023 F	GIB, CROSS SLIDE.....	1
37	PT2802011 S	SCREW, GIB.....	1
38	PT2902042 F	SHOE.....	2
39	PT2802043 F	LEVER, CROSS SLIDE LOCK.....	2
40	PT1205053 F	SWIVEL.....	1
41	PT1401160 F	GEAR.....	1
42	51104	BEARING, THRUST BALL.....	1
43	557 x 5520	KEY.....	1
44	159 x 516	OILER.....	1
45	PT1301131 F2	SCREW, CROSS FEED.....	1
46	PT2205079 F	BRACKET.....	1
47	PT1802085 F2	DIAL, GRAD.....	1
48	PT2802038 S	SCREW, THUMB.....	1
49	PT4002013 F	CRANK, BALL.....	1
50	557 x 5512	KEY.....	1

400 CARRIAGE ASS'Y - ROUND TOOLPOST CA

ITEM	PART NUMBER	DESCRIPTION	Q'TY
51	PT2802009 S	SCREW.....	1
52	PT4302027 F	HANDLE.....	1
53	AN 04	NUT, LOCK.....	1
54	AW 04	WASHER, LOCK NUT.....	1
55	51104	BEARING, THRUST BALL.....	1
56	101 x 5162	SCREW, SOCKET HEAD CAP.....	2
57	103 x 51638	SCREW, SOCKET HEADLESS SET.....	1
58	PT1302130 F	SHAFT.....	1
59	PT1401159 F	GEAR.....	1
60	PT1907043 F	BUSHING.....	1
61	561 x 20	RING, STOP.....	1
62	101 x 51620	SCREW, SOCKET HEAD CAP.....	3
63	PT2205077 F	GIB, FRONT (LEFT).....	1
64	PT2205078 F	GIB, FRONT (RIGHT).....	1
65	PT4117021 F	WIPER.....	2
66	523 x 328	SCREW, MACHINE.....	4
67	PT1205051 F	SADDLE.....	1
68	PT4117020 F	WIPER.....	2
69	523 x 328	SCREW, MACHINE.....	4
70	PT3105021 F	GIB, (REAR).....	1
71	125 x 516	NUT, HEX.....	4
72	119 x 5161	BOLT, HEX HEAD.....	4
73	101 x 5161	SCREW, SOCKET HEAD CAP.....	4
74	PT2205076 F	PLATE, GIB.....	1
75	523 x 3510	SCREW, MACHINE.....	4
76	PT1702076 F	COVER.....	1

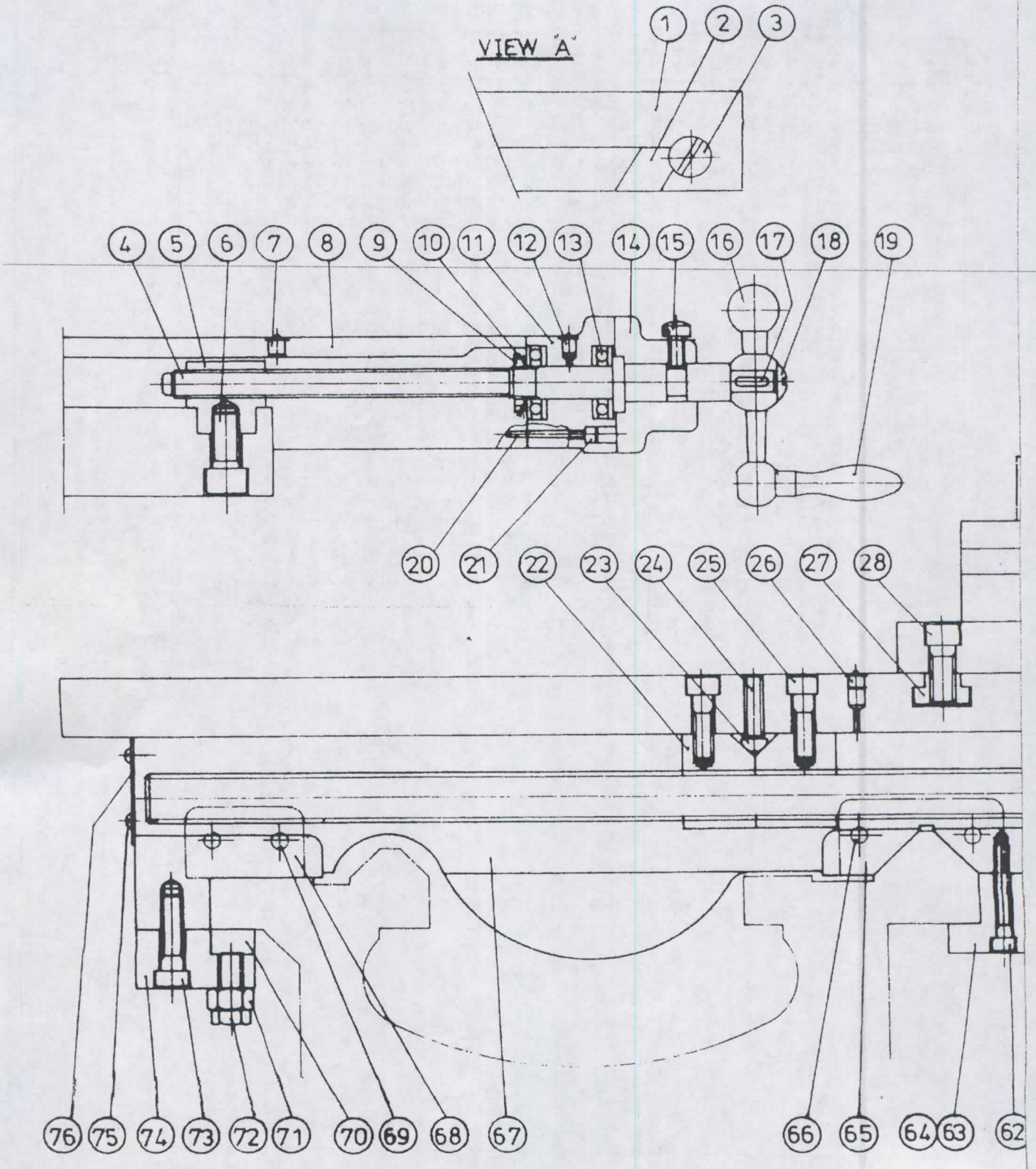
VIEW 'A'
1
2
3
4
5
6
7
8
9
10
11
12
13
14
15
16
17
18
19
20
21
22
23
24
25
26
27
28
76
75
74
73
72
71
70
69
68
67
66
65
64
63
62

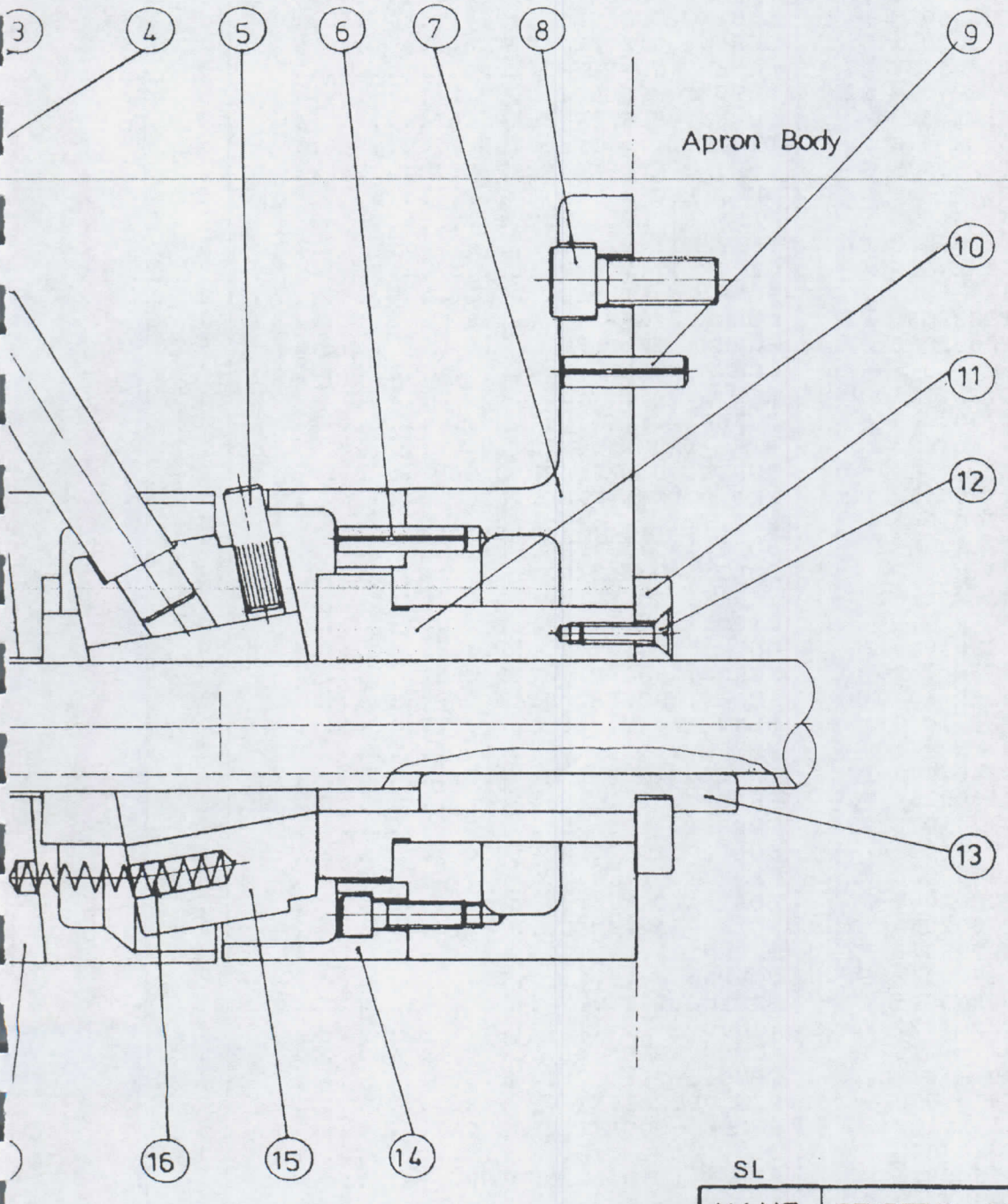

SL

NAME	STARTING LEVER A'SSY	
SOUTH BEND LATHE, INC.		
TYPE	DRAWING	DATE
SBL 400	C. J. K.	'83. 1

400 CARRIAGE ASS'Y - SQUARE TURRET CA

ITEM	PART NUMBER	DESCRIPTION	Q'TY
1	PT1205052 F	SLIDE, CROSS	1
2	PT3105022 F	GIB, CROSS SLIDE	1
3	PT2802011 S	SCREW, GIB ADJUSTING	2
4	PT1301132 F2	SCREW, COMPOUND	1
5	PT3607013 F2	NUT, COMPOUND	1
6	101 x 3834	SCREW, SOCKET HEAD CAP	1
7	159 x 516	OILER	4
8	PT1205075 F	TOP, COMPOUND REST	1
9	AN 03	NUT, LOCK	1
10	AW 03	WASHER, LOCK NUT	1
11	PT2205080 F	BRACKET	1
12	159 x 516	OILER	1
13	51103	BEARING, THRUST BALL	1
14	PT1802086 F2	COLLAR, GRAD	1
15	PT2802005 S	SCREW, THUMB	1
16	160 - 01 A	CRANK, BALL	1
17	557 x 5510	KEY	1
18	PT2802009 S	SCREW	1
19	551 x 630	PIN, TAPER	2
20	101 x 5161	SCREW, SOCKET HEAD CAP	2
21	PT3607012 F2	NUT, CROSS FEED	2
22	PT2901041 F	PIN	1
23	103 x 3838	BOLT, ADJUSTING	1
23-1	103 x 3834	BOLT, ADJUSTING	1
24	101 x 5161	SCREW, SOCKET HEAD CAP	2
25	159 x 516	oiler	3
26	PT2801042 F	NUT, "T"	3
27	501 x 1020	SCREW, SOCKET HEAD CAP	2
27-1	501 x 1040	SCREW, SOCKET HEAD CAP	1
28	PT2401040 F2	PLATE	1
29	557 x 4410	KEY	1
30	PT2401041 F2	PLATE, INDEXING	1
31	PT1302154 F2	SHAFT	1
32	PT1201078 F2	TURRET, SQUARE	1
32-1	190 - 03 A	BOLT, TOOL CLAMPING	12
33	PT2002024 F2	WASHER	1
34	PT2801063 F2	BOLT, LOCK	1
35	PT2802064 F2	NUT, CLAMPING	1
36	PT2302028 F2	LEVER	1
37	PT1702048 S	COVER	1
38	SP0805025	SPRING	1
39	PT2901022 F2	PIN	1
40	121 x 31634	SCREW, MACHINE	1
41	190 - 01 D	PLUG	1
42	549 x 670	PIN, STRAIGHT	2
43	101 x 12212	SCREW, SOCKET HEAD CAP	4
44	PT3105023 F	GIB, COMPOUND	1
45	PT2802011 S	SCREW, GIB ADJUSTING	1
46	PT2902042 F	SHOE	2
47	PT2802043 F	LEVER, CROSS SLIDE LOCK	2

400 CARRIAGE ASS'Y - SQUARE TURRET CA

ITEM	PART NUMBER	DESCRIPTION	Q'TY
48	PT1205053 F	SWIVEL.....	1
49	PT1401160 F	GEAR.....	1
50	51104	BEARING, THRUST BALL.....	1
51	557 x 5520	KEY.....	1
52	159 x 516	OILER.....	1
53	PT1301131 F2	SCREW, CROSS FEED.....	1
54	PT2205079 F	BUSHING, CROSS FEED SCREW.....	1
55	PT1802085 F2	DIAL, GRAD.....	1
56	PT2802038 S	SCREW, THUMB.....	1
57	160 - 05 A	CRANK, BALL.....	1
58	557 x 5512	KEY.....	1
59	PT2802009 S	SCREW, ROUND HEAD.....	1
60	AN 04	NUT, LOCK.....	1
61	AW 04	WASHER, LOCK NUT.....	1
62	51104	BEARING, THRUST BALL.....	1
63	101 x 5162	SCREW, SOCKET HEAD CAP.....	2
64	103 x 51638	SCREW, SOCKET HEADLESS SET.....	1
65	PT1302130 F	SHAFT.....	1
66	PT1401159 F	GEAR.....	1
67	PT1907043 F	BUSHING.....	1
68	561 x 20	RING, STOP.....	1
69	101 x 51620	SCREW, SOCKET HEAD CAP.....	3
70	PT2205077 F	GIB, FRONT (LEFT).....	1
71	PT2205078 F	GIB, FRONT (RIGHT).....	1
72	PT4117021 F	WIPER.....	2
73	523 x 328	SCREW, MACHINE.....	4
74	PT1205051 F	SADDLE.....	1
75	PT4117020 F	WIPER.....	2
76	523 x 328	SCREW, MACHINE.....	4
77	PT3105021 F	GIB, (REAR).....	1
78	125 x 516	NUT, HEX.....	4
79	119 x 5161	BOLT, HEX HEAD.....	4
80	101 x 5161	SCREW, SOCKET HEAD CAP.....	4
81	PT2205076 F	PLATE, GIB.....	1
82	523 x 3510	SCREW, MACHINE.....	4
83	PT1702076 F	COVER.....	1

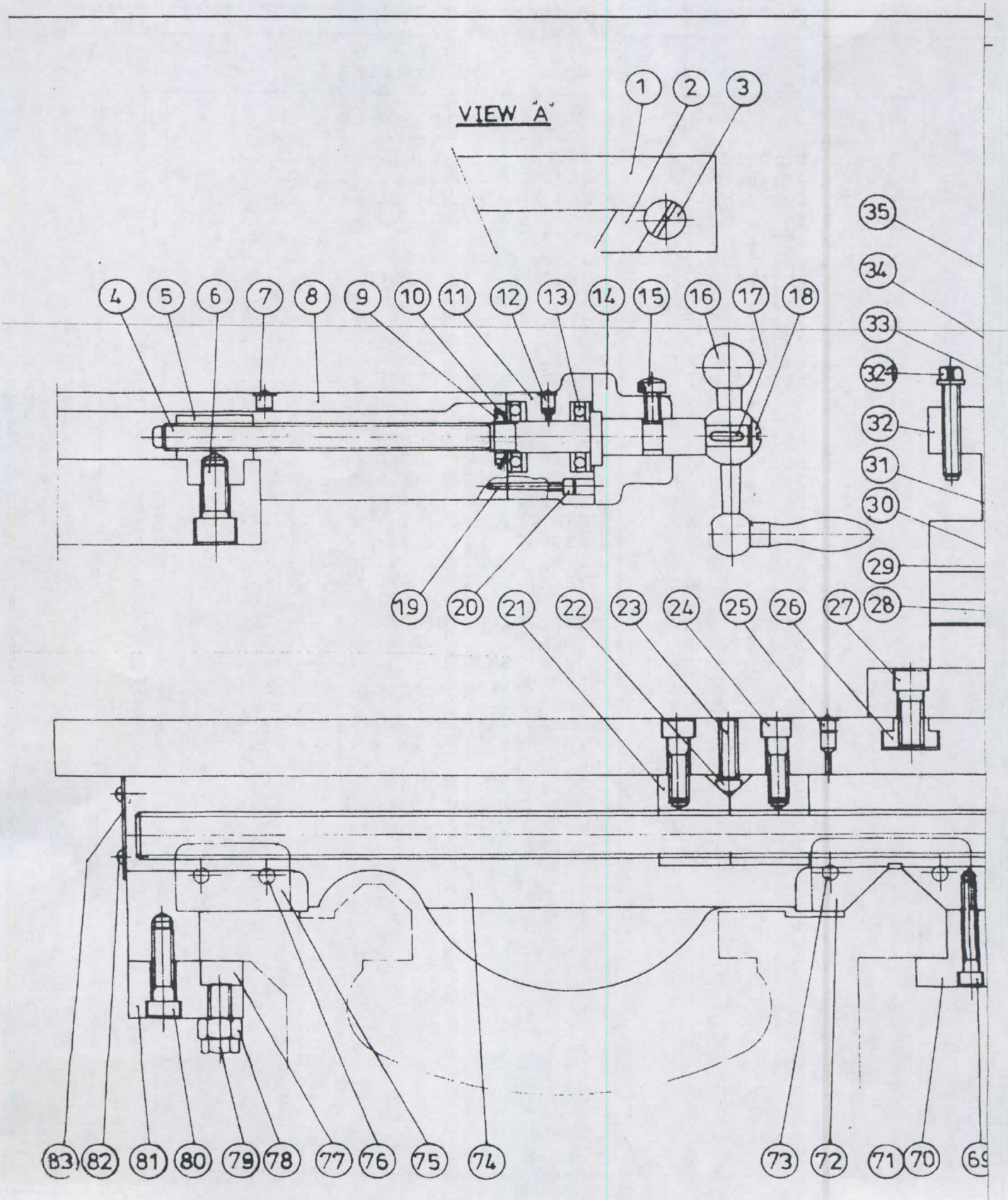
VIEW "A"
1
2
3
4
5
6
7
8
9
10
11
12
13
14
15
16
17
18
19
20
21
22
23
24
25
26
27
28
29
30
31
32
32A
33
34
35
69
70
71
72
73
74
75
76
77
78
79
80
81
82
83

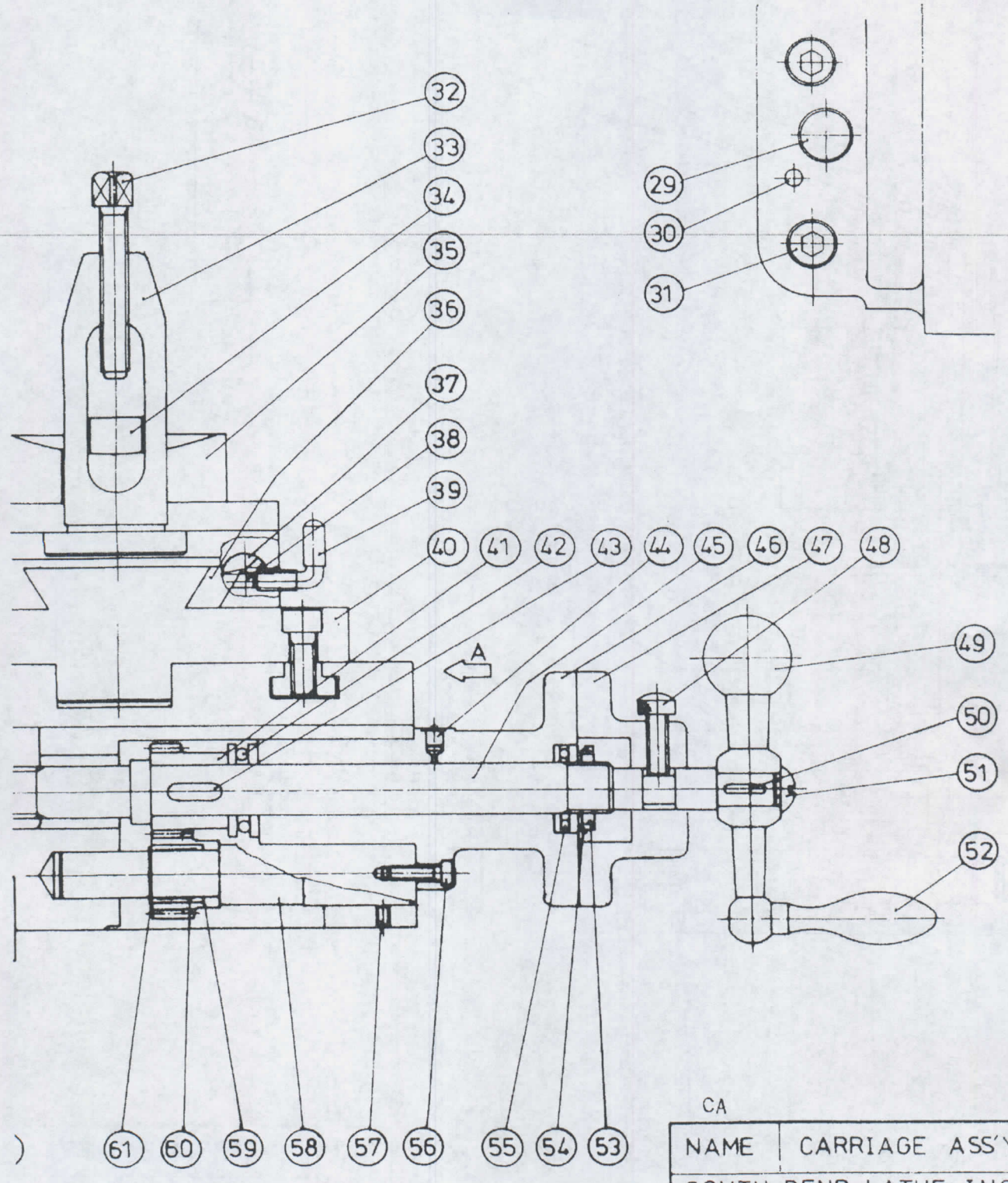

CA

NAME	CARRIAGE ASS'Y	
SOUTH BEND LATHE, INC.		
TYPE	DRAWING	DATE
SBL 400	P. G. J.	1983.1

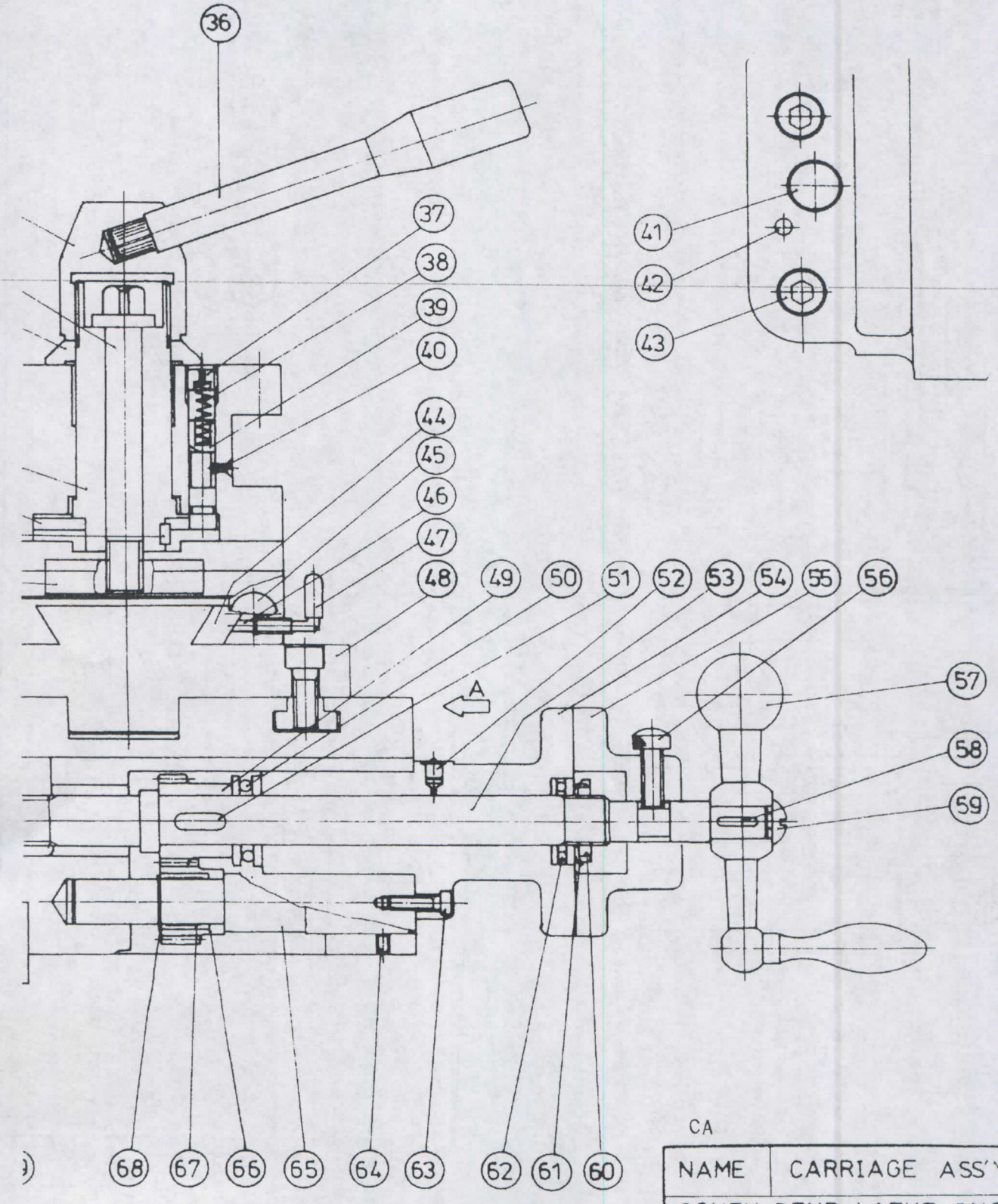

CA

NAME	CARRIAGE ASS'Y	
SOUTH BEND LATHE, INC.		
TYPE	DRAWING	DATE
SBL 400	P G J	1983.1

400 SQUARE TOOLPOST ST

ITEM	PART NUMBER	DESCRIPTION	Q'TY
1	PT2401040 F2	PLATE.....	1
2	PT2401041 F2	PLATE, INDEXING.....	1
3	557 x 4410	KEY.....	1
4	PT1201078 F2	TOOLPOST, SQUARE.....	1
5	121 x 31634	SCREW, MACHINE.....	1
6	PT2901022 F2	PIN.....	1
7	190 - 03 A	BOLT, TOOL CLAMPING.....	12
8	SP0805025	SPRING.....	1
9	PT1702048 S	SCREW, COVER.....	1
10	PT2002024 F2	WASHER.....	1
11	PT1302154 F2	SHAFT.....	1
12	PT2801063 F2	BOLT, LOCK.....	1
13	PT2802064 F2	NUT, CLAMPING.....	1
14	PT2302028 F2	LEVER.....	1

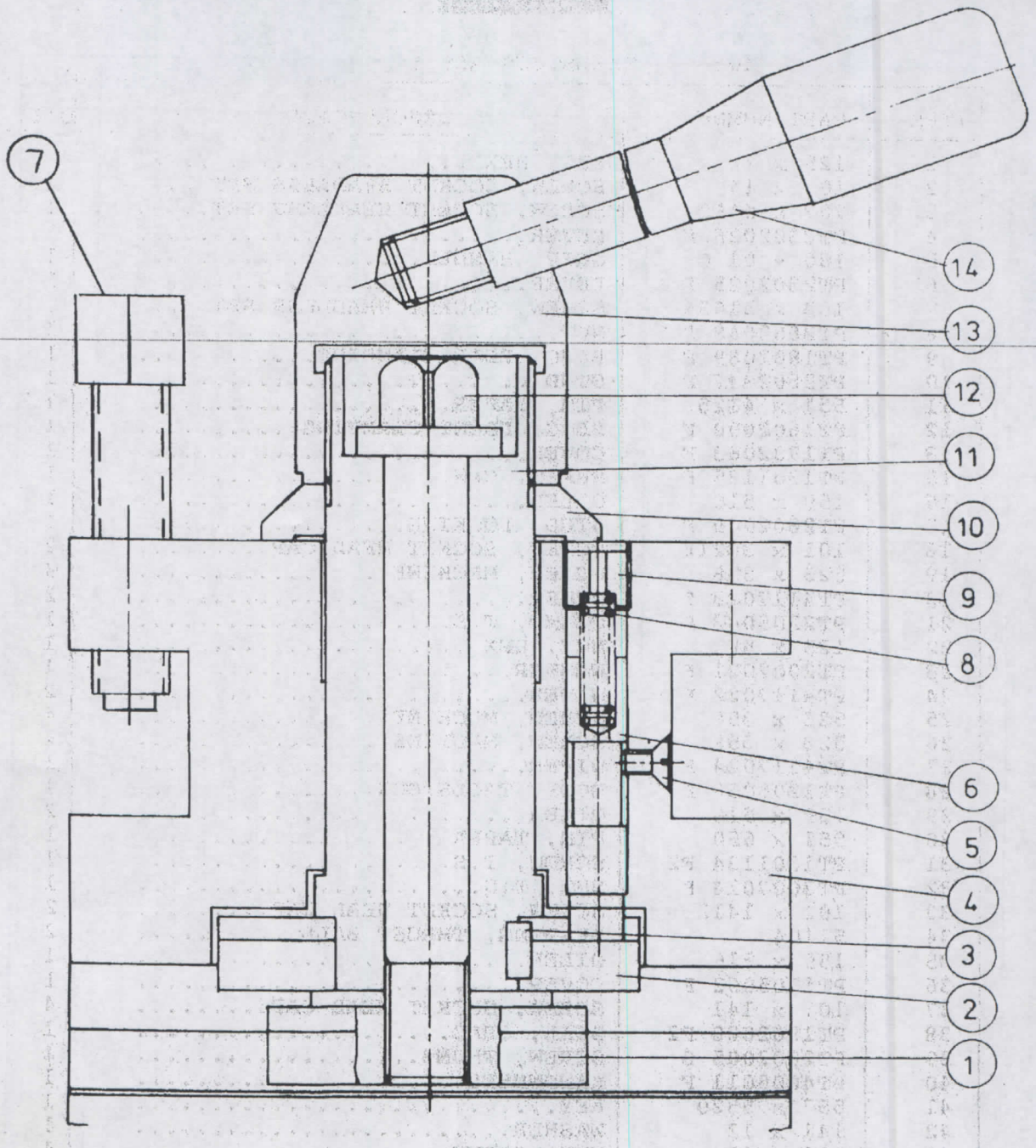

ST

NAME	SQUARE TOOLPOST	
SOUTH BEND LATHE, INC		
TYPE	DRAWING	DATE
SBL 400	J. H. R	1983. 5

400 TAILSTOCK ASS'Y TA

ITEM	PART NUMBER	DESCRIPTION	Q'TY
1	125 x 14	NUT, HEX.....	1
2	103 x 141	SCREW, SOCKET HEADLESS SET.....	1
3	103 x 51638	SCREW, SOCKET HEADLESS SET.....	1
4	PT2302026 F	LEVER.....	1
5	160 - 01 G	GRIP, HANDLE.....	1
6	PT2302025 F	LEVER.....	1
7	103 x 51638	SCREW, SOCKET HEADLESS SET.....	1
8	PT2802048 F	NUT.....	1
9	PT1802089 F	PLUG, REAR CLAMPING.....	1
10	PT2802047 F	STUD.....	1
11	551 x 4125	PIN, TAPER.....	1
12	PT1802090 F	PLUG, FRONT CLAMPING.....	1
13	PT1702063 F	COVER.....	1
15	PT1301135 F	SHAFT, CAM.....	1
16	159 x 516	OILER.....	1
17	PT2802049 F	STUD, LOCKING.....	1
18	101 x 38212	SCREW, SOCKET HEAD CAP.....	2
19	523 x 358	SCREW, MACHINE.....	4
20	PT4117023 F	WIPER.....	2
21	PT2205083 F	CLAMP, T.S.....	1
22	125 x 58	NUT, HEX.....	1
23	PT2002021 F	WASHER.....	1
24	PT4117022 F	WIPER.....	2
25	523 x 358	SCREW, MACHINE.....	4
26	523 x 358	SCREW, MACHINE.....	4
27	PT4117024 F	WIPER.....	1
28	PT1205058 F	BODY, TAILSTOCK.....	1
29	159 x 516	OILER.....	2
30	551 x 650	PIN, TAPER.....	1
31	PT1301134 F2	SCREW, T.S.	1
32	PT3607014 F	NUT, T.S.....	1
33	101 x 1412	SCREW, SOCKET HEAD CAP.....	2
34	51104	BEARING, THRUST BALL.....	2
35	159 x 516	OILER.....	1
36	PT1705062 F	COVER.....	1
37	101 x 141	SCREW, SOCKET HEAD CAP.....	4
38	PT1802088 F2	DIAL, GRAD.....	1
39	PT2802005 S	SCREW, THUMB.....	1
40	PT4005011 F	HANDWHEEL.....	1
41	557 x 5520	KEY.....	1
42	141 x 12	WASHER.....	1
43	133 x 12	NUT, CROWN.....	1
44	AN 04	NUT, LOCK.....	1
45	AW 04	WASHER, LOCK NUT.....	1
46	PT4302022 F	HANDLE.....	1
47	170 - 68 FF2	PLATE, POSITION (TOP).....	1
48	523 x 356	SCREW, MACHINE.....	4
49	170 - 66 FF2	PLATE, POSITION (BOTTOM).....	1
50	119 x 382	BOLT, HEX.....	1
51	PT1802053 S	WASHER.....	1

400 TAILSTOCK ASS'Y TA

ITEM	PART NUMBER	DESCRIPTION	Q'TY
52	PT2802046 F	BOLT.....	2
52	PT3102024 F	GIB.....	1
55	PT2205082 F	PLATE, TAILSTOCK UNDER.....	1
56	PT2802050 F	STOP.....	1
57	PT2901043 F	KEY,"T".....	1
58	PT1301153 F	SPINDLE,TAILSTOCK.....	1

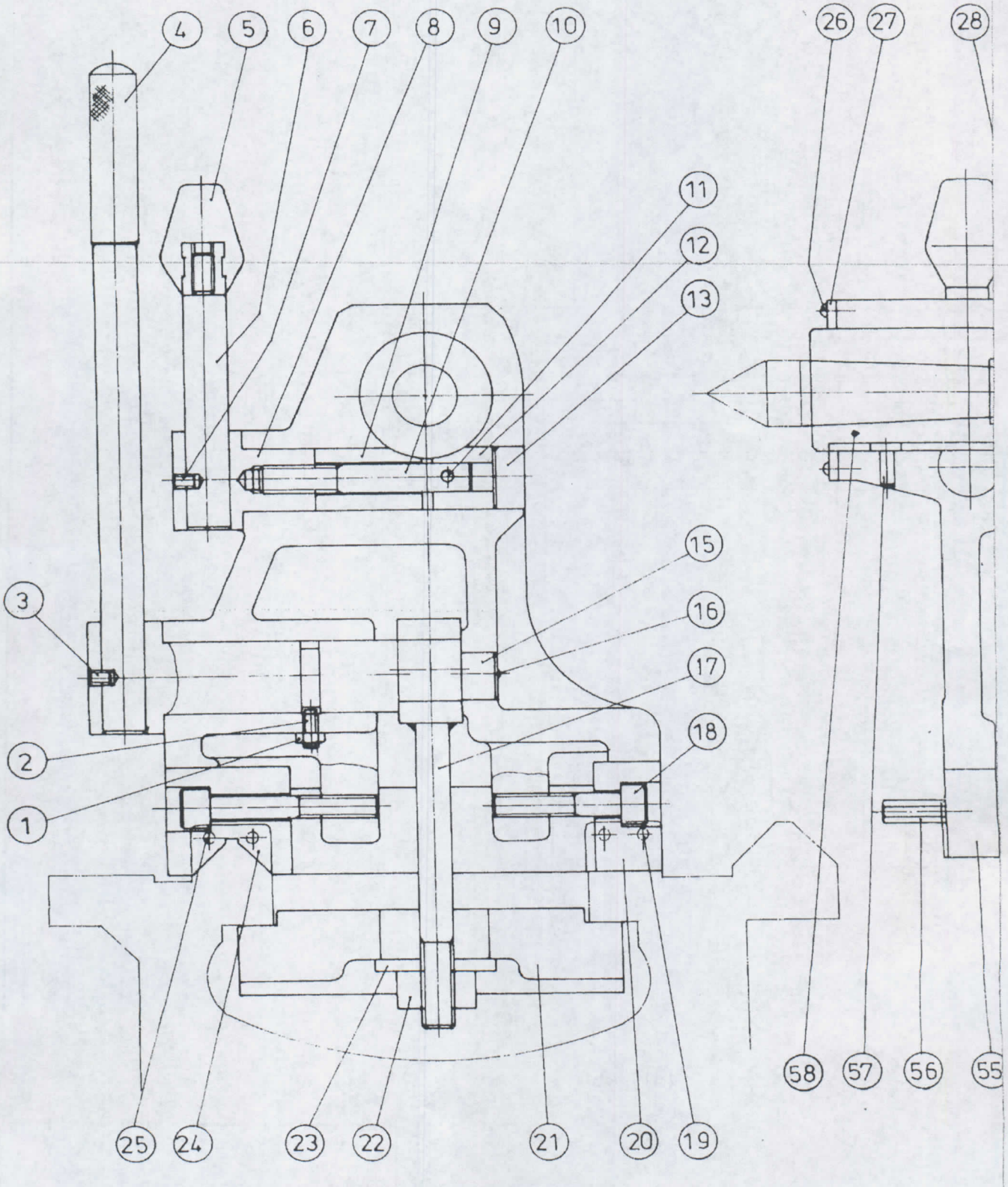
4
5
6
7
8
9
10
26
27
28
11
12
13
15
16
17
18
3
2
1
58
57
56
55
25
24
23
22
21
20
19

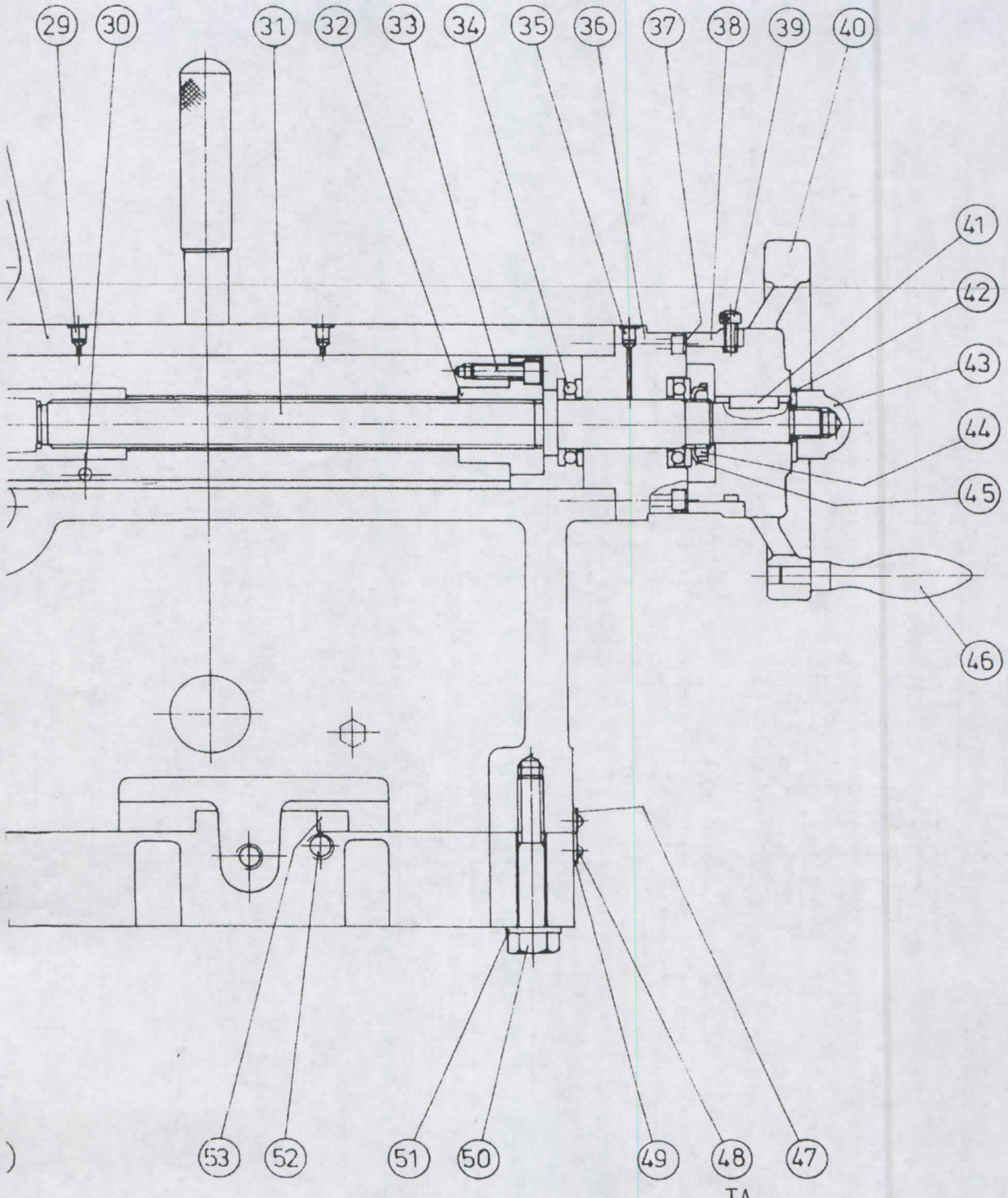

TA

NAME	TAIL STOCK ASS'Y	
SOUTH BEND LATHE, INC.		
TYPE	DRAWING	DATE
SBL 400	P. G. J.	1983.1

400 BED AND LEG ASS'Y BL

ITEM	PART NUMBER	DESCRIPTION	Q'TY
1	121 x 1412	SCREW, MACHINE.....	2
2	PT2202087 F	PLATE, SWITCH ATTACH.....	1
3	525 x 35	NUT, HEX.....	2
4	523 x 3530	SCREW, MACHINE.....	2
5	Z15 G09	SWITCH, MICRO.....	1
6	PT2902044 F	PIN, STOP.....	1
7	141 x 58	WASHER.....	12
8	125 x 58	NUT, HEX.....	12
9	PT2802060 F	BOLT, STUD.....	4
10	ST2620080	SPRING.....	1
11	119 x 383	BOLT, HEX.....	1
12	141 x 38	WASHER.....	1
13	PT2205085 F	PLATE, MOTOR ATTACH.....	1
14	PT4602020 F	BAND, BRAKE.....	1
15	PT4617021 F	LINING.....	1
16	MO54860023	MOTOR, 230 VOLT.....	1
16-1	MO54860046	MOTOR, 460 VOLT.....	1
17	PT4117025 F	RUBBER.....	4
18	143 x 38	WASHER, SPRING.....	4
19	119 x 38112	BOLT, HEX.....	4
20	121 x 1412	SCREW, MACHINE.....	5
21	125 x 14	NUT, HEX.....	5
22	PT2002023 F	WASHER.....	1
23	501 x 1225	SCREW, SOCKET HEAD CAP.....	1
24	557 x 10860	KEY.....	1
25	PT1702068 F	COVER.....	1
26	161 x 1814	RIVET.....	8
27	119 x 34238	BOLT, HEX.....	10
28	143 x 34	WASHER, SPRING.....	10
29	101 x 51634	SCREW, SOCKET HEAD CAP.....	4
30	141 x 516	WASHER.....	4
31	170 - 44 F2	PLATE, NAME.....	1
32	170 - 46 S	PLATE, NAME.....	1
33	PT1202071 F	BOX, ELECTRIC.....	1
34	PT4602023 F	HINGE.....	2
35	161 x 1812	RIVET.....	4
36	PT1702070 F	COVER.....	1
37	PT2202091 F	CLAMP.....	1
38	151 x 1834	PIN, SPLIT.....	1
39	141 x 38	WASHER.....	1
40	PT1902045 F	BUSHING.....	1
41	103 x 1414	SCREW, SOCKET HEADLESS SET.....	1
42	PT4302023 F	KNOB.....	1
43	PT2202092 F	CLAMP.....	1
44	101 x 1412	SCREW, SOCKET HEAD CAP.....	2
45	PT2605011 F	PULLEY.....	1
46	125 x 12	NUT, HEX.....	2
47	119 x 122	BOLT, HEX.....	2
48	PT2205086 F	LEVER, BRAKE.....	1
49	PT2802051 F	BOLT, FOUNDATION.....	6

400 BED AND LEG ASS'Y BL

ITEM	PART NUMBER	DESCRIPTION	Q'TY
50	125 x 12	NUT, HEX.....	6
51	125 x 1	NUT, LEVELING.....	6
52	PT2802052 F	BOLT, LEVELING.....	6
53	PT2405033 F	PLATE.....	6
54	119 x 1412	BOLT, HEX.....	4
55	PT1702065 F	COVER.....	1
56	PT1202063 F	PAN, CHIP.....	1
57	170 - 70 F2	PLATE, NAME.....	1
58	523 x 356	SCREW, MACHINE.....	6
59	PT1205059 F	BED (30 INCH BETWEEN CENTERS)..	1
59-1	PT1205060 F	BED (40 INCH BETWEEN CENTERS)..	1
60	553 x 525	PIN, SPRING.....	4
61	101 x 51634	SCREW, SOCKET HEAD CAP.....	4
62	PT1401152 F	RACK (30 INCH BETWEEN CENTERS).	1
62-1	PT1401153 F	RACK (40 INCH BETWEEN CENTERS).	1
63	PT4302024 F	KNOB.....	1
64	PT1702079 F	COVER.....	1
65	161 x 1812	RIVET.....	4
66	PT4602022 F	HINGE.....	2
67	123 x 1412	SCREW, MACHINE.....	4
68	PT1205062 F	LEG, RIGHT.....	1
69	PT2402034 F	PEDAL.....	1
70	PT2302027 F	LEVER.....	2
71	PT2202089 F	BRACKET.....	2
72	551 x 4850	PIN, TAPER.....	2
73	101 x 1412	SCREW, SOCKET HEAD CAP.....	2
74	101 x 1412	SCREW, SOCKET HEAD CAP.....	1
75	PT1802045 S	COLLAR.....	1
76	PT2205088 F	BRACKET, ROD.....	2
77	101 x 51634	SCREW, SOCKET HEAD CAP.....	4
78	PT1302142 F	BRAKE PEDAL ROD (30" BETWEEN CENTERS).....	1
78-1	PT1302143 F	BRAKE PEDAL ROD (40" BETWEEN CENTERS).....	1
79	PT1205061 F	LEG, LEFT.....	1
81	551 x 4850	PIN, TAPER.....	1
82	VB - 73	V-BELT.....	2

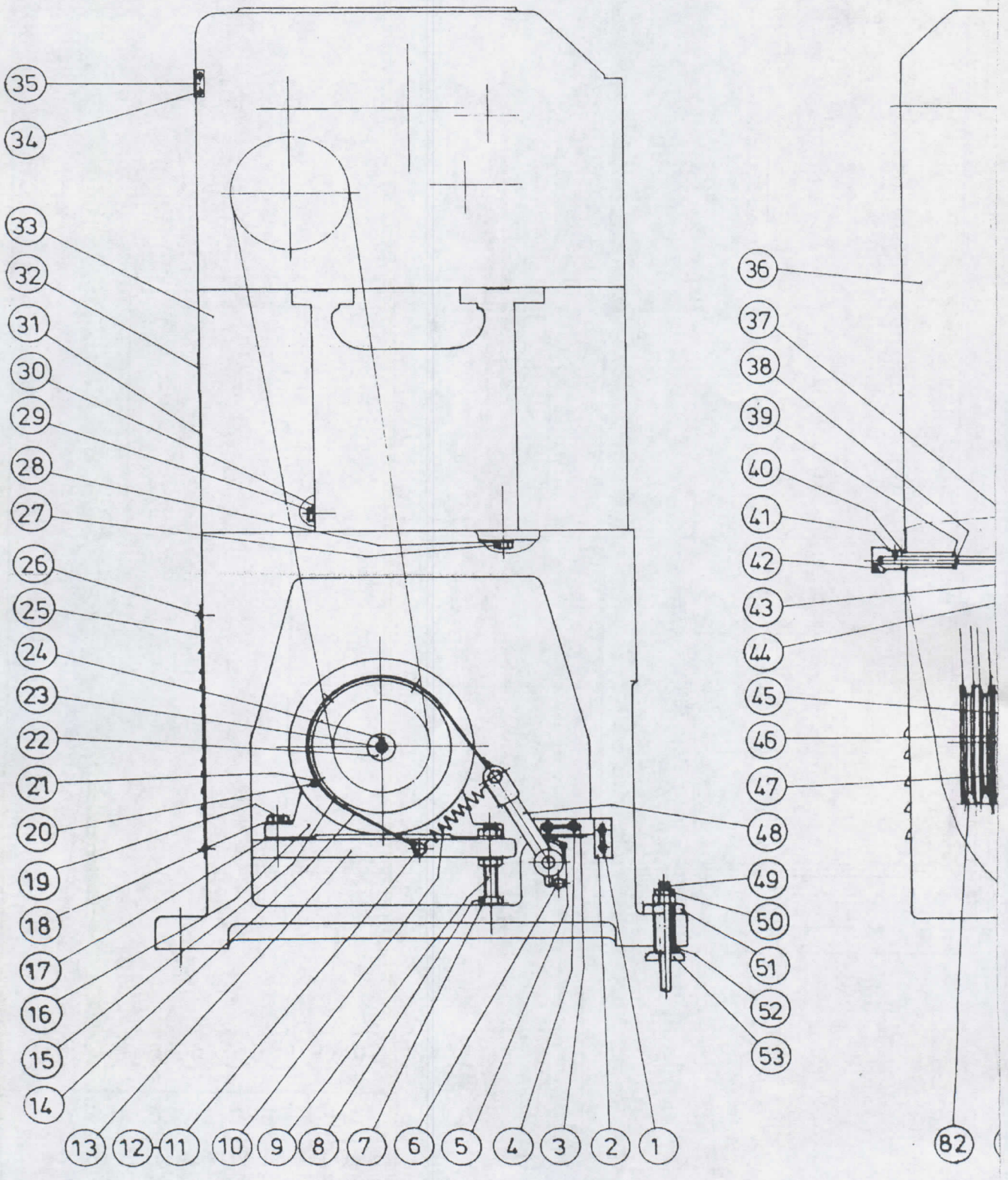
35
34
33
32
31
30
29
28
27
26
25
24
23
22
21
20
19
18
17
16
15
14
13
12
11
10
9
8
7
6
5
4
3
2
1
36
37
38
39
40
41
42
43
44
45
46
47
48
49
50
51
52
53
B2

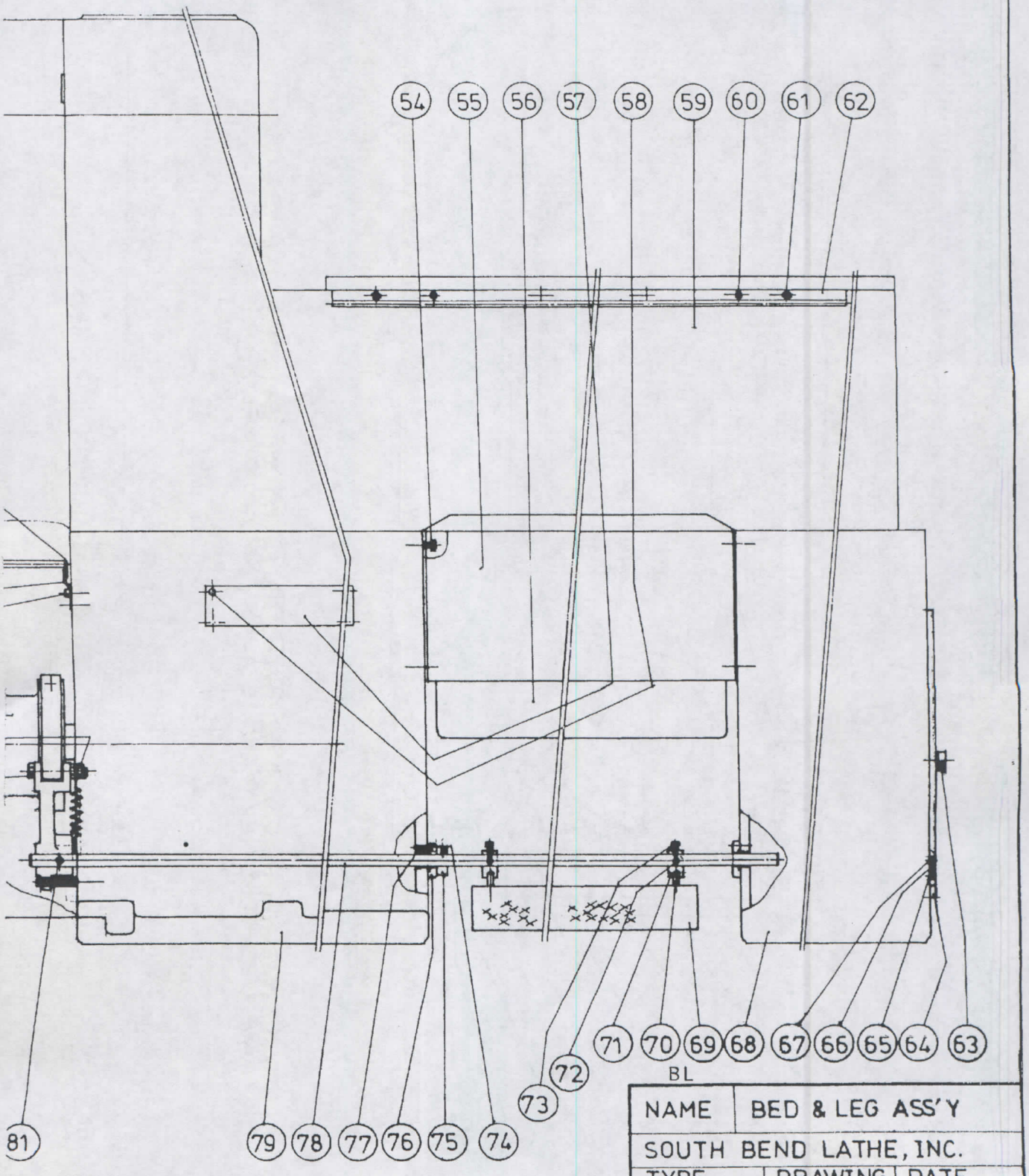

NAME	BED & LEG ASS'Y	
SOUTH BEND LATHE, INC.		
TYPE	DRAWING	DATE
SBL 400	P. G. J.	1983.1

400 STEADY REST ASS'Y SR

ITEM	PART NUMBER	DESCRIPTION	Q'TY
1	PT2205095 F	CLAMP.....	1
2	119 x 58412	BOLT, HEX.....	1
3	141 x 58	WASHER.....	1
4	125 x 58	NUT, HEX.....	1
5	PT1205064 F	BODY, STEADY REST UNDER.....	1
6	PT2902045 F	PIN.....	1
7	103 x 145	SCREW, SOCKET HEADLESS SET.....	1
8	PT4716010 F	JAW.....	3
9	PT1302145 F	SHAFT, JAW.....	3
10	PT1302145 F	SCREW.....	3
11	PT1702072 F	COVER.....	3
12	553 x 430	PIN, SPRING.....	3
13	PT4305025 F	KNOB.....	3
14	PT1205065 F	BODY, STEADY REST UPPER.....	1
15	PT2802024 S	SCREW, THUMB.....	1
16	PT2802054 F	BOLT.....	3
17	PT2205094 F	BOLT, LOCK.....	1
18	PT2902046 F	PIN.....	1
19	103 x 1414	SCREW, SOCKET HEADLESS SET.....	1
20	101 x 31612	SCREW, SOCKET HEAD CAP.....	12

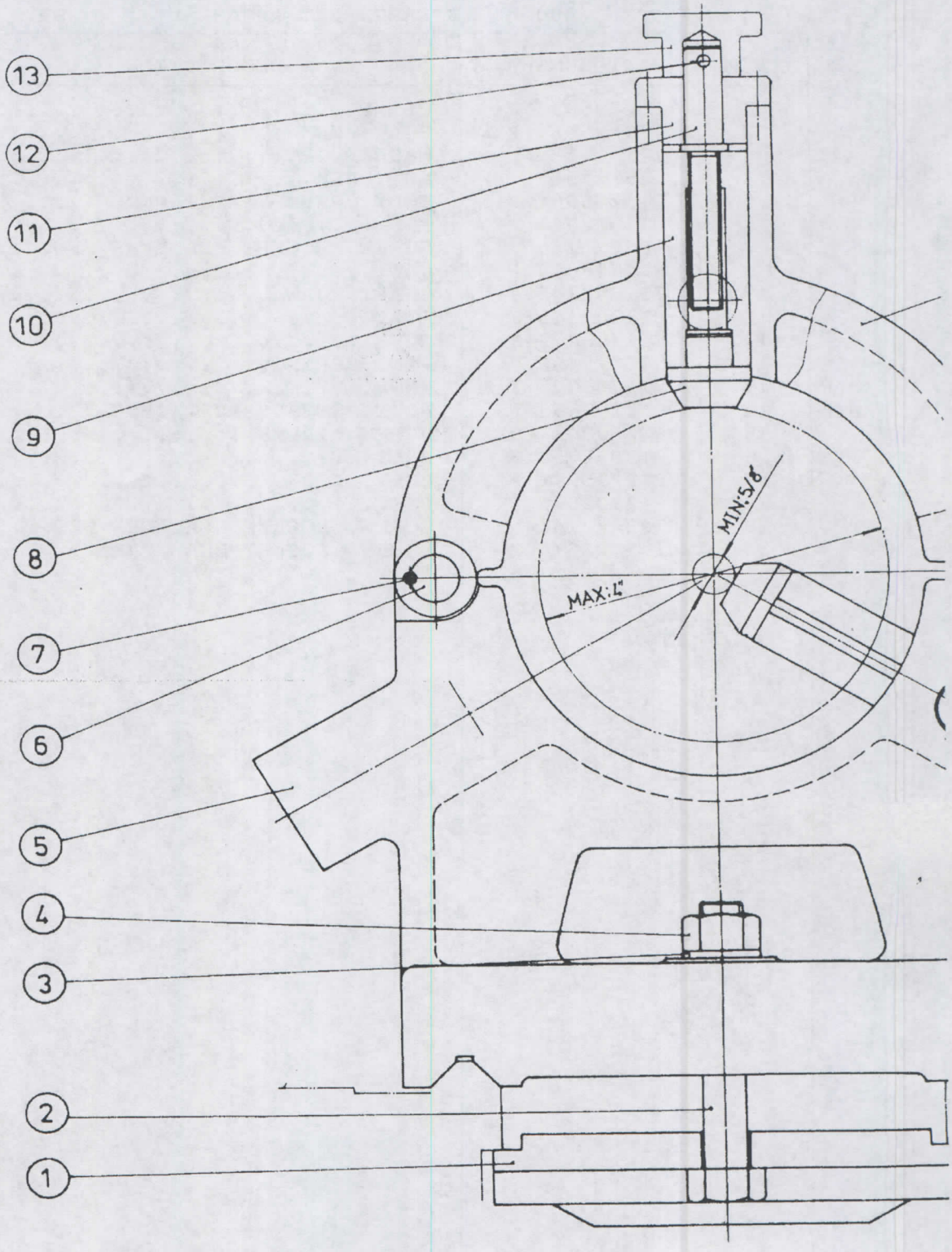
13
12
11
10
9
8
7
6
5
4
3
2
1
MIN: 5/8"
MAX: 1"

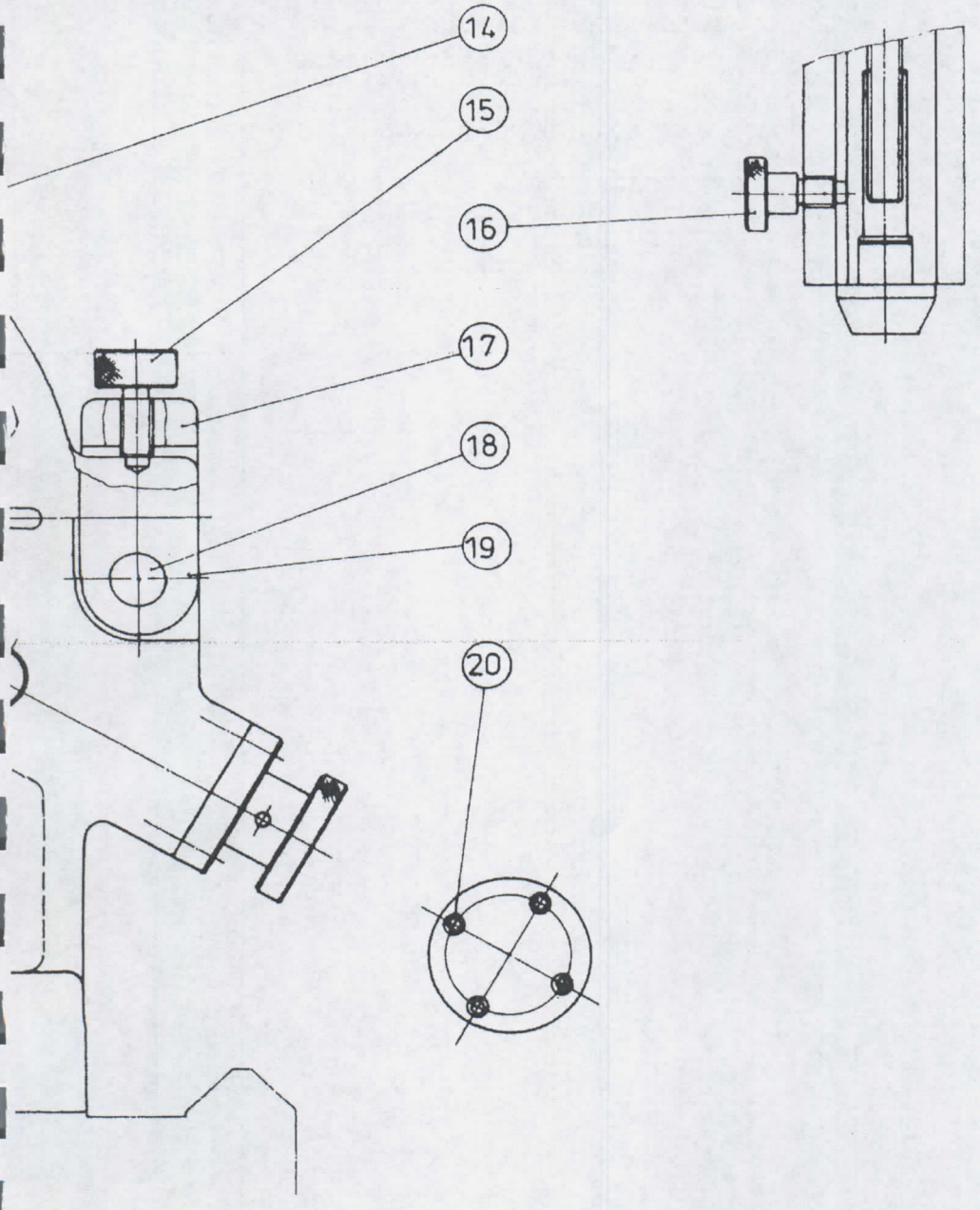

SR

NAME	STEADY REST ASS'Y	
SOUTH BEND LATHE, INC.		
TYPE	DRAWING	DATE
SBL 400	P. G. J.	1983.1

400 FOLLOW REST ASS'Y FR

ITEM	PART NUMBER	DESCRIPTION	Q'TY
1	501 x 415	SCREW, SOCKET HEAD CAP.....	8
2	PT2802030 S	BOLT, GUIDE (DOG POINT).....	2
3	PT4302009 S	KNOB.....	2
4	553 x 532	PIN, SPRING.....	2
5	PT1702046 S	BUSHING, FLANGED.....	2
6	PT1301091 S	SCREW, JAW ADJUSTING.....	2
7	PT1301092 S	SHAFT, JAW.....	2
8	PT4716002 S	TIP, REPLACEABLE JAW.....	2
9	503 x 56	SCREW, SOCKET HEADLESS SET.....	2
10	PT1205066 F	BODY, FOLLOW REST.....	1
11	PT2002051 W	WASHER.....	3
12	119 x 122	BOLT, HEX.....	3

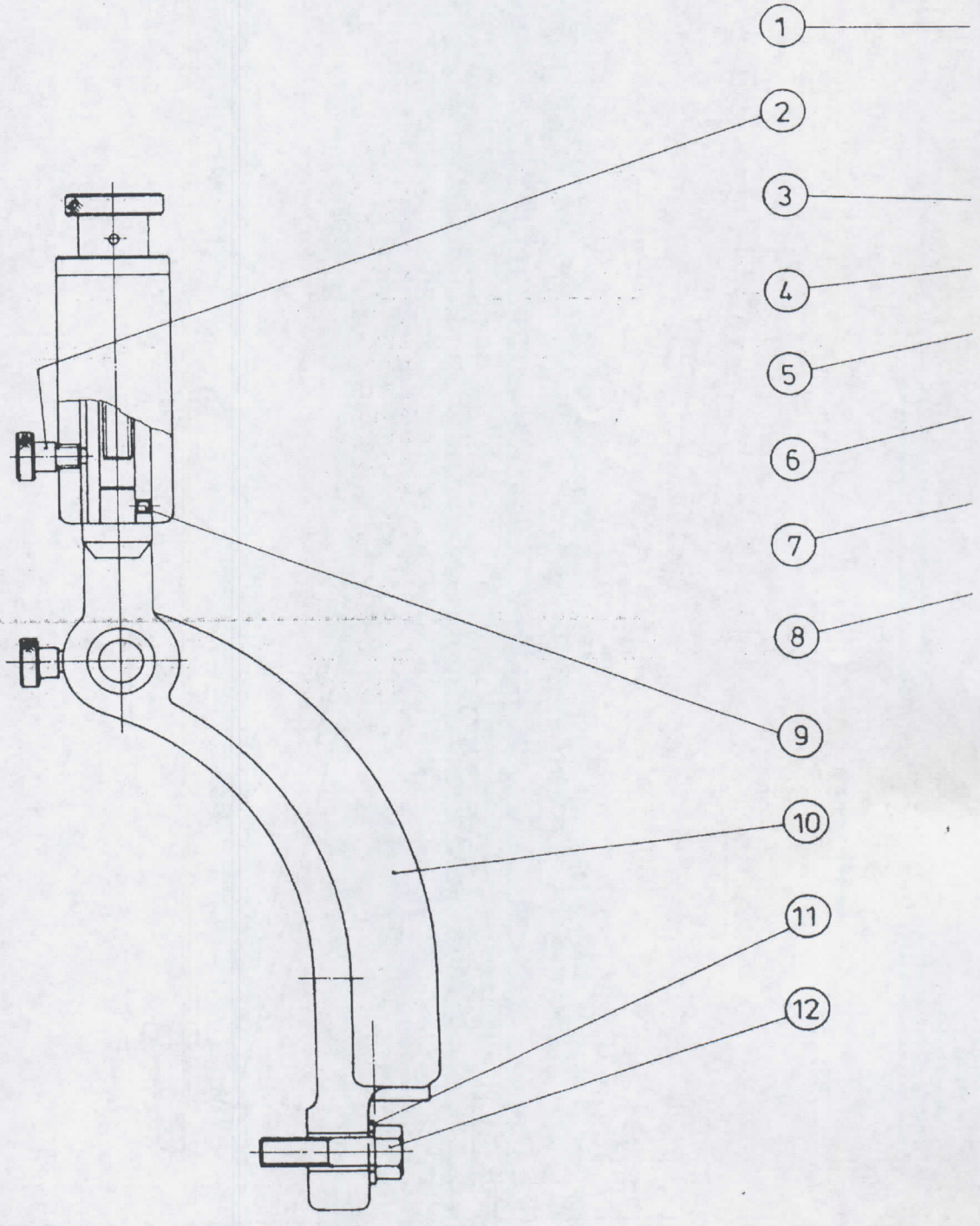
1
2
3
4
5
6
7
8
9
10
11
12

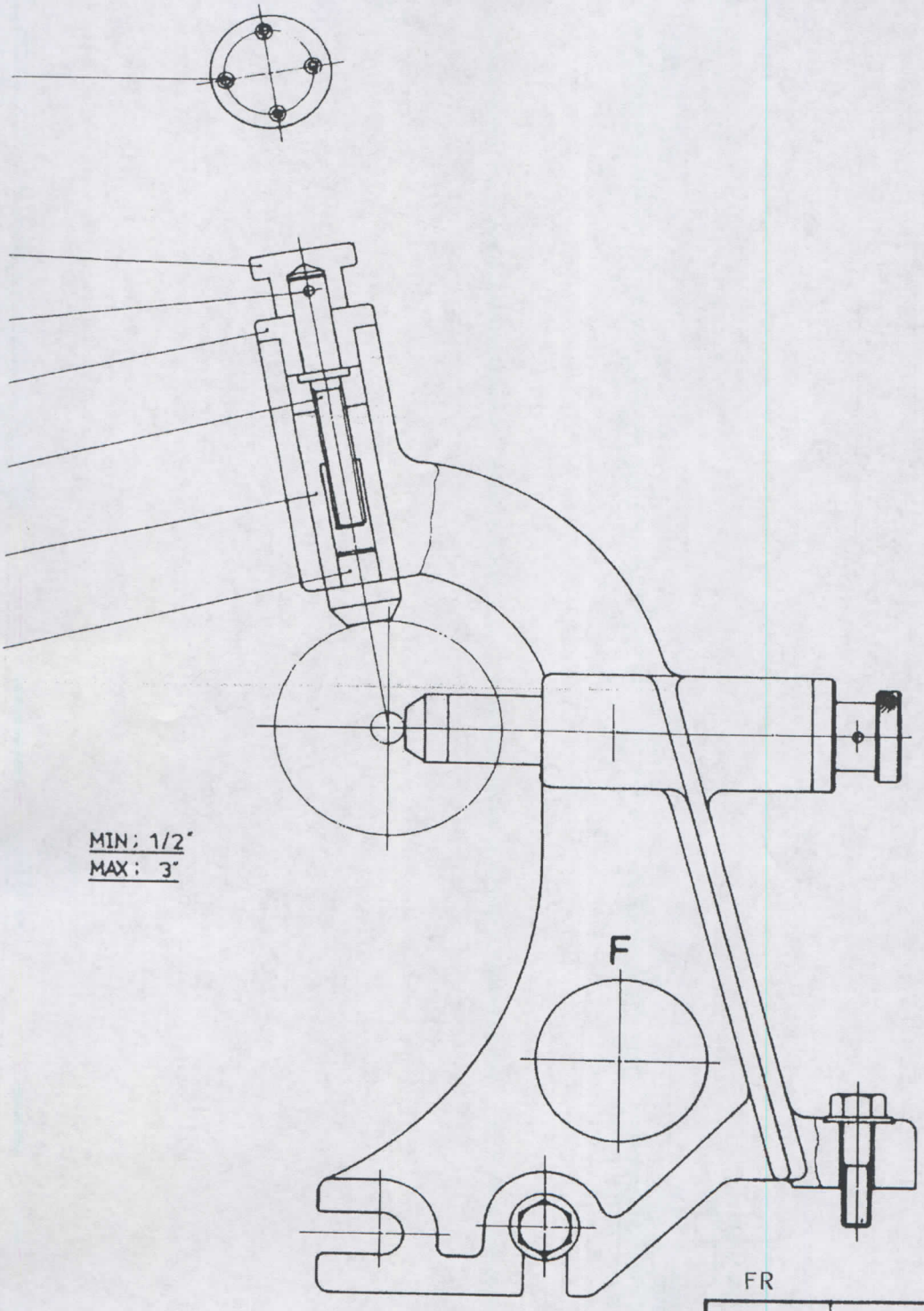

FR

NAME	FOLLOW REST	
SOUTH BEND LATHE, INC.		
TYPE	DRAWING	DATE
SBL 400	P. G. J.	1983.1

400 COOLANT AND LIGHTING SYSTEM CT

ITEM	PART NUMBER	DESCRIPTION	Q'TY
1	PT4422023 F	HOSE, FLEXIBLE	1
2	PT4602014 S	VALVE, OVER FLOW	1
3	ELPT 38	ELBOW	1
4	PT4402024 F	PIPE	1
5	PT4402025 F	PIPE	1
6	ELPT 38	ELBOW	1
7	PT4402013 S	NOZZLE	1
8	NTF 3838	NIPPLE, NOZZLE	1
9	SP0222036	SPRING	1
10	ELPT 38	ELBOW	1
11	P 18	O-RING	2
12	PT2802035 S	PLUG	1
13	TPT 38	JOINT, TEE	1
14	127 x 38	NUT	1
15	PT4616015 S	VALVE	1
16	PT4402026 F	PIPE	1
17	526 x 820	BOLT, WING	2
18	PT2205042 S	BRACKET	1
19	101 x 51634	SCREW, SOCKET HEAD CAP	2
20	TPT 38	TEE	1
21	NTF 3838	NIPPLE	1
22	NTF 3814	NIPPLE	1
23	AQP-60 F	PUMP, COOLANT	1
24	119 x 435	BOLT, HEX	4
25	PT1702074 F	COVER	1
26	PT2402037 F	PLATE, CLEANER	1
27	125 x 14	NUT, HEX	4
28	PT1202067 F	RESERVOIR	1

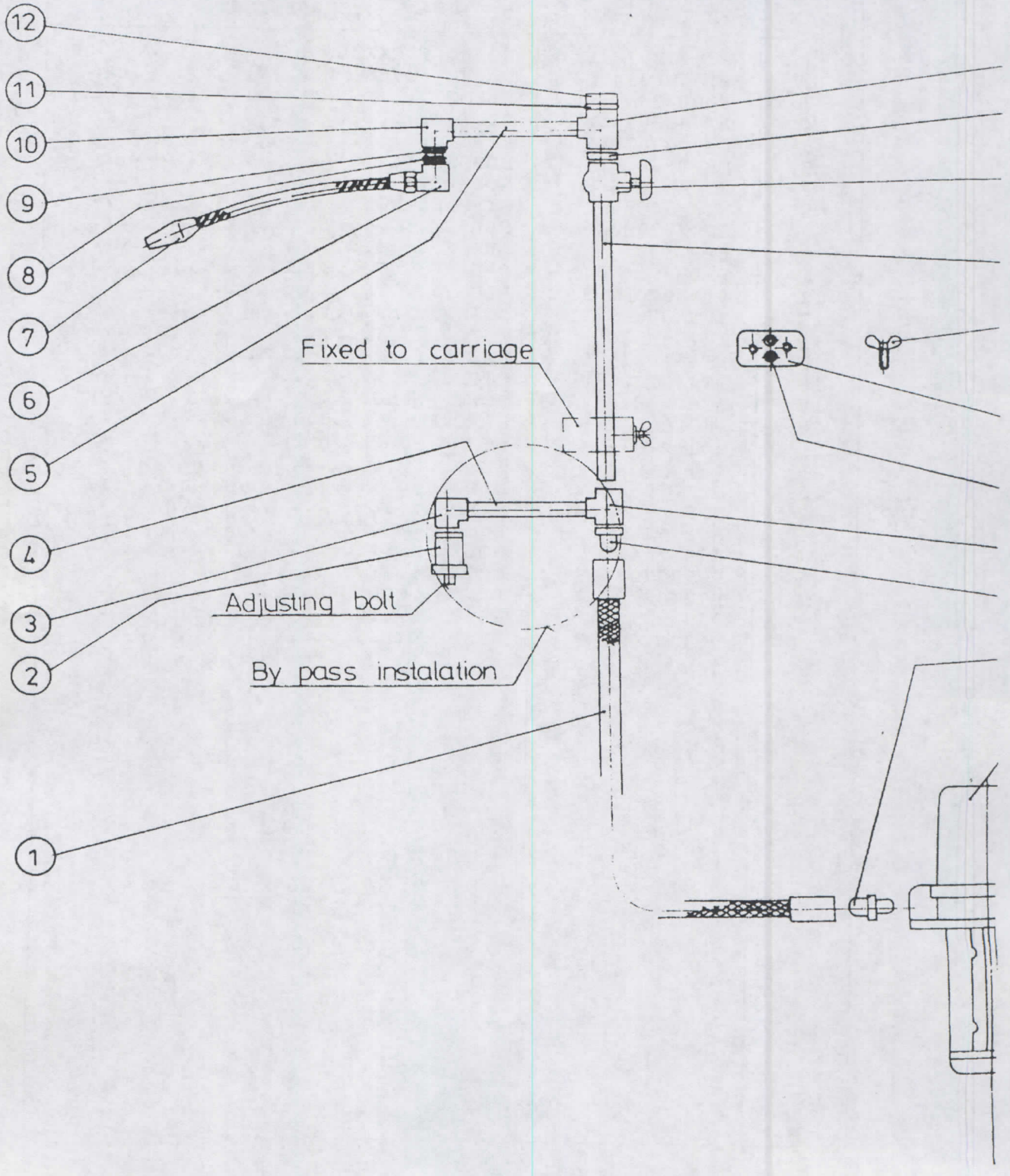
12
11
10
9
8
7
6
5
4
3
2
1
Fixed to carriage
Adjusting bolt
By pass instalation

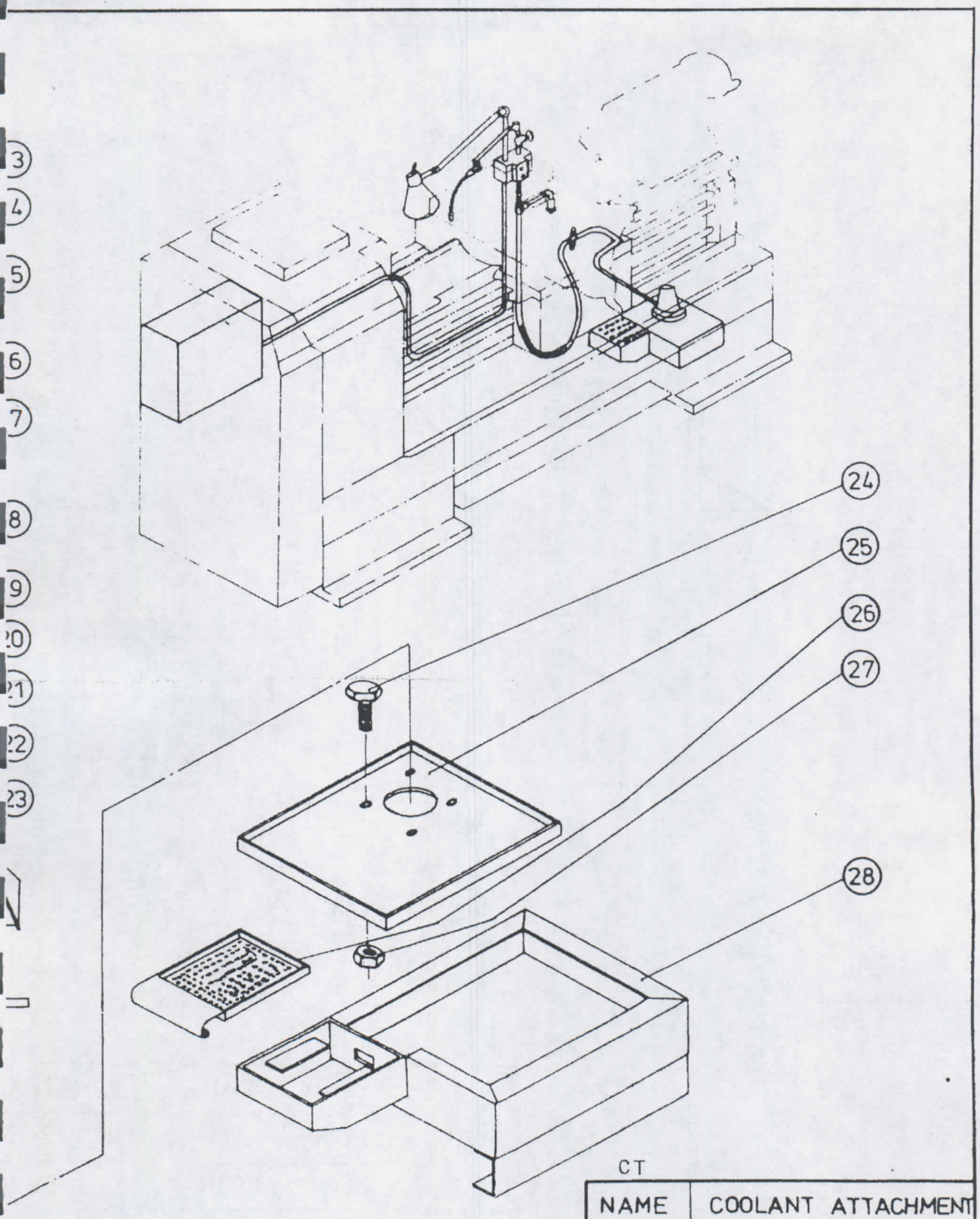

CT

NAME	COOLANT ATTACHMENT	
SOUTH BEND LATHE, INC.		
TYPE	DRAWING	DATE
SBL 400	P. G. J.	1983. 1

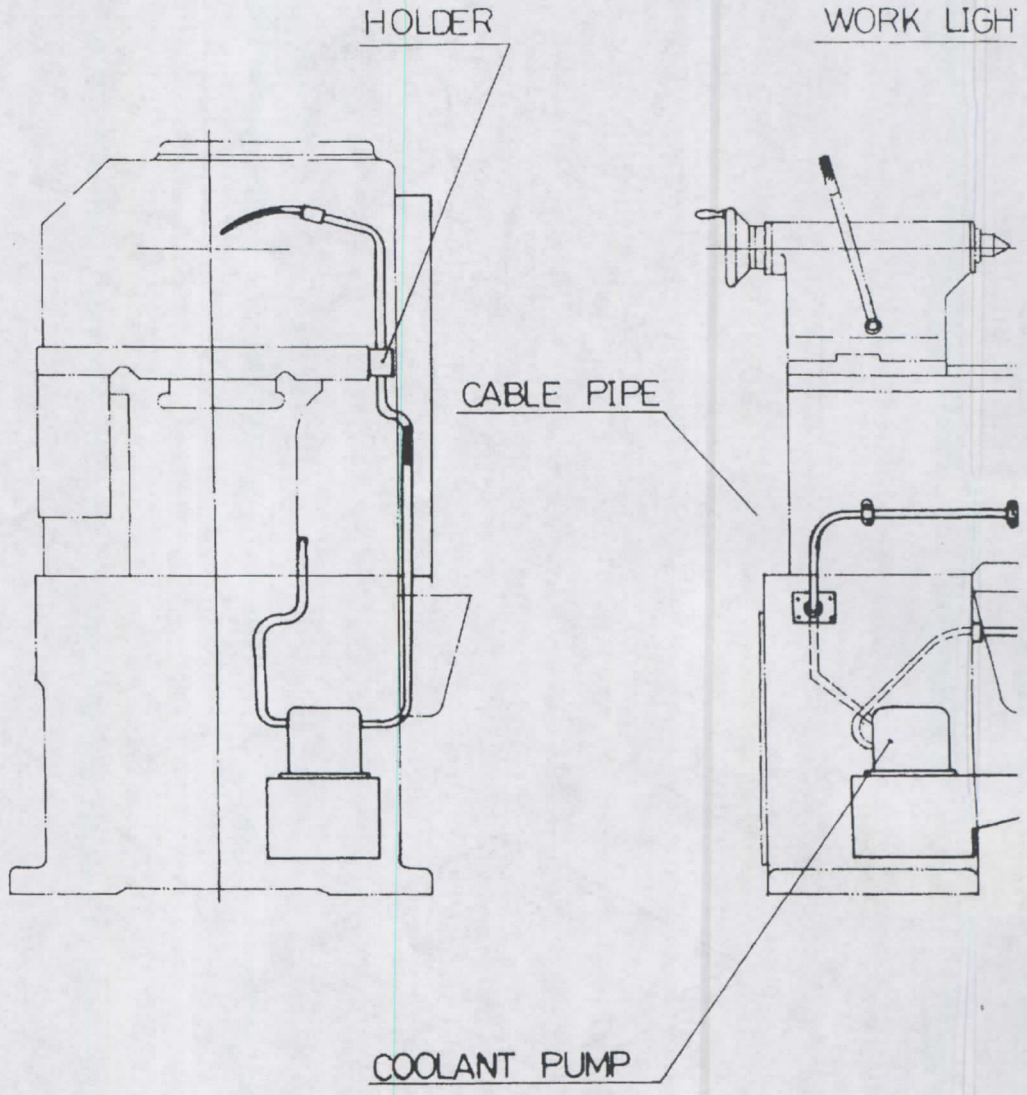

PARTS	WORK LIGHT	11
	PUMP MOTOR	6C
	MAIN MOTOR	5H

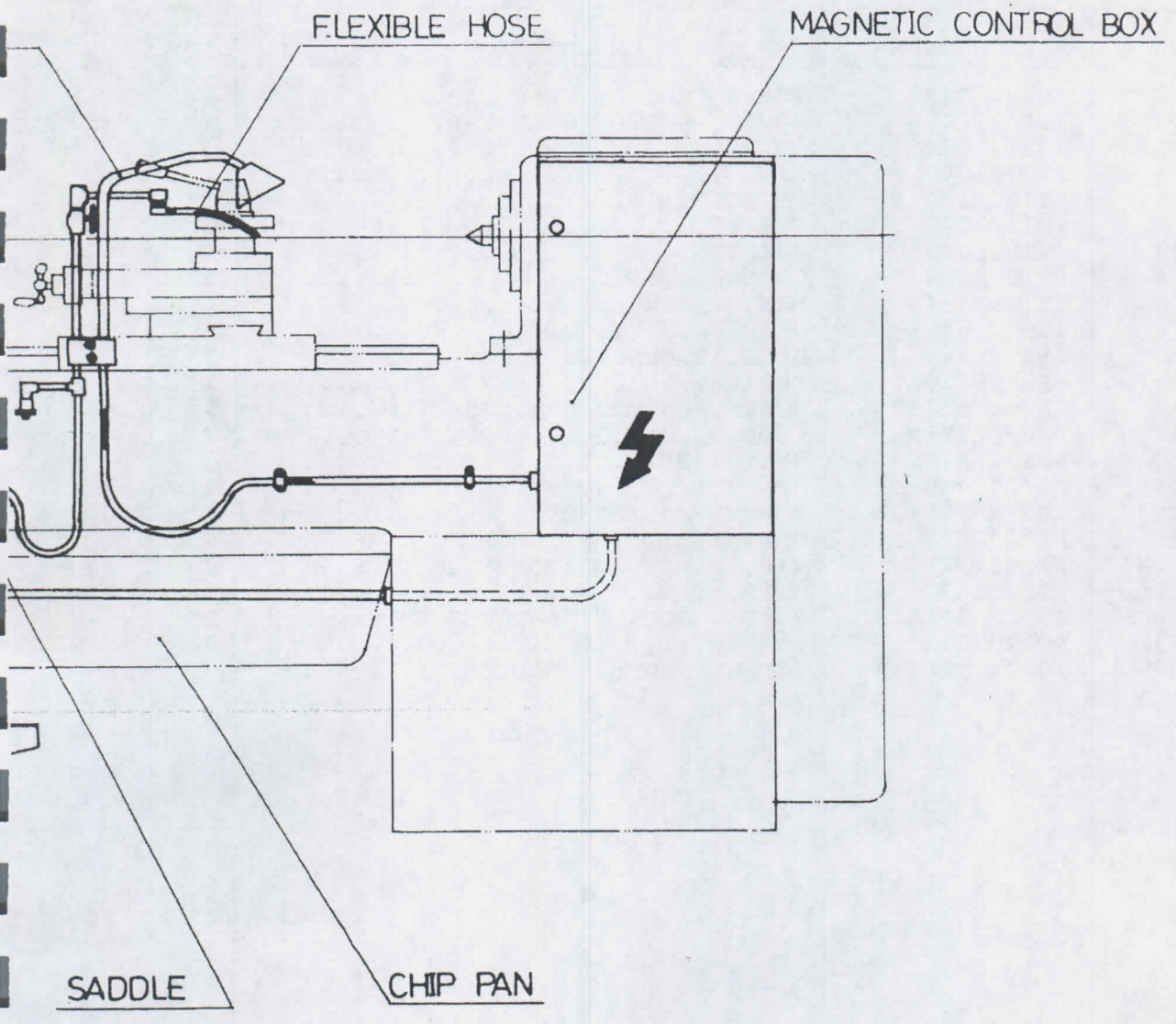

60 W	
W	2P
P	220 V
P	440 V

CT

NAME	COOLANT & LIGHT	
SOUTH BEND LATHE, INC.		
TYPE	DRAWING	DATE
SBL400	J.G.Y	'82.6

400 LONGITUDINAL STOP LN

ITEM	PART NUMBER	DESCRIPTION	Q'TY
1	101 x 1458	SCREW, SOCKET HEAD CAP.....	3
2	107 x 1458	SCREW, SOCKET HEAD CAP.....	1
3	159 x 516	OILER.....	1
4	PT2901040 F	PIN.....	1
5	PT1301129 F	PLUNGER, TRIP.....	1
6	SP1527028	SPRING.....	1
7	PT1905042 F	BUSHING.....	1
8	PT1802084 F	COLLAR.....	1
9	551 x 4145	PIN, TAPER.....	1
10	159 x 516	OILER.....	1
11	157 x 14	BALL, STEEL.....	1
12	SP1206020	SPRING.....	1
13	103 x 51638	SCREW, SOCKET HEADLESS SET.....	1
14	PT4302021 F	KNOB.....	1
15	551 x 4145	PIN, TAPER.....	1
16	PT2205075 F	BRACKET.....	1
17	101 x 516114	SCREW, SOCKET HEAD CAP.....	2
18	PT1302127 F	BAR, LIMIT (30" BETWEEN CTRS)..	1
18-1	PT1302128 F	BAR, LIMIT (40" BETWEEN CTRS)..	1
19	PT2201072 F	STOP.....	2
20	103 x 516516	SCREW, SOCKET HEADLESS SET.....	2
21	PT2205074 F	BRACKET.....	1
22	101 x 516114	SCREW, SOCKET HEAD CAP.....	2

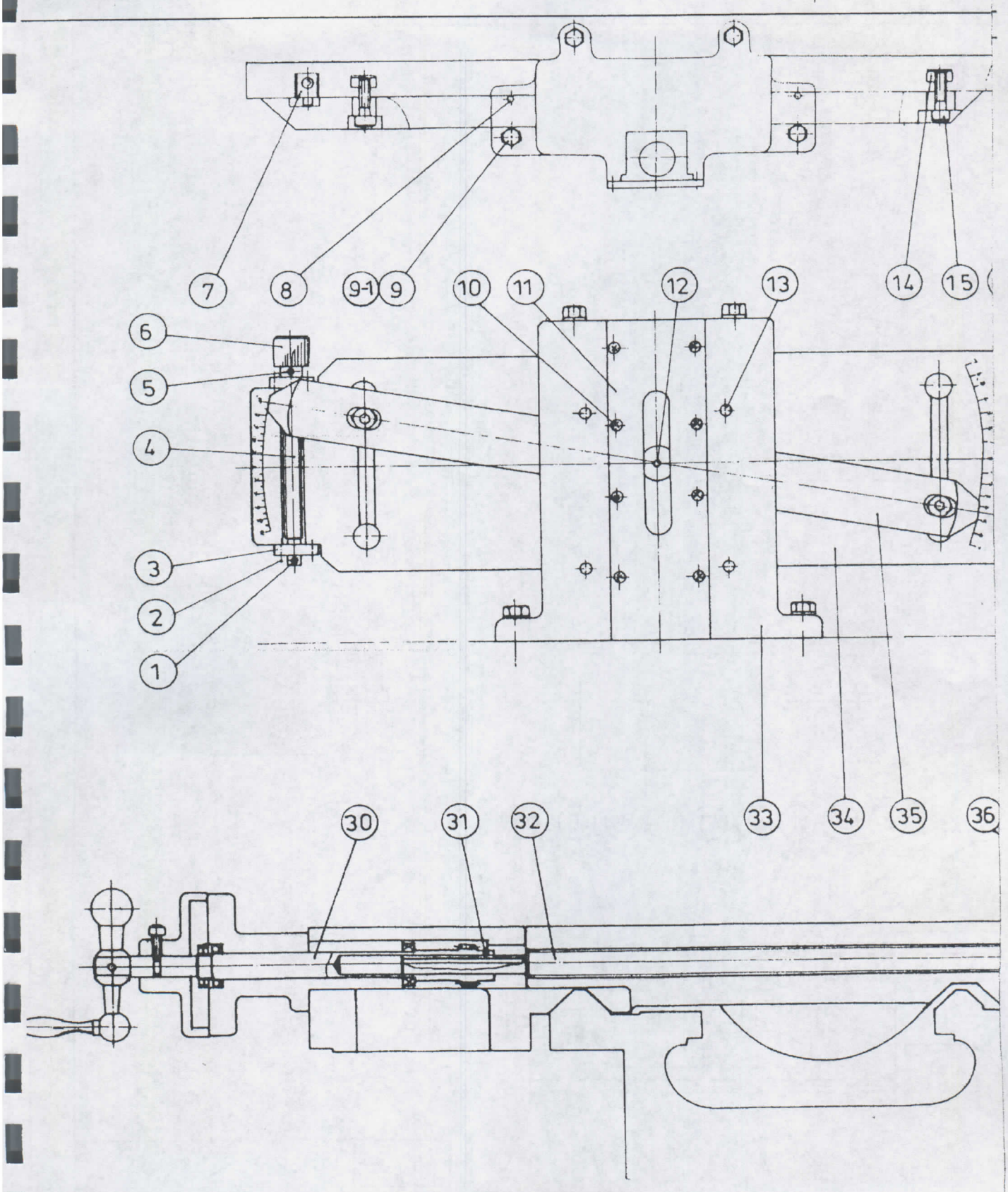
7
8
9-1
9
10
11
12
13
14
15
6
5
4
3
2
1
30
31
32
33
34
35
36

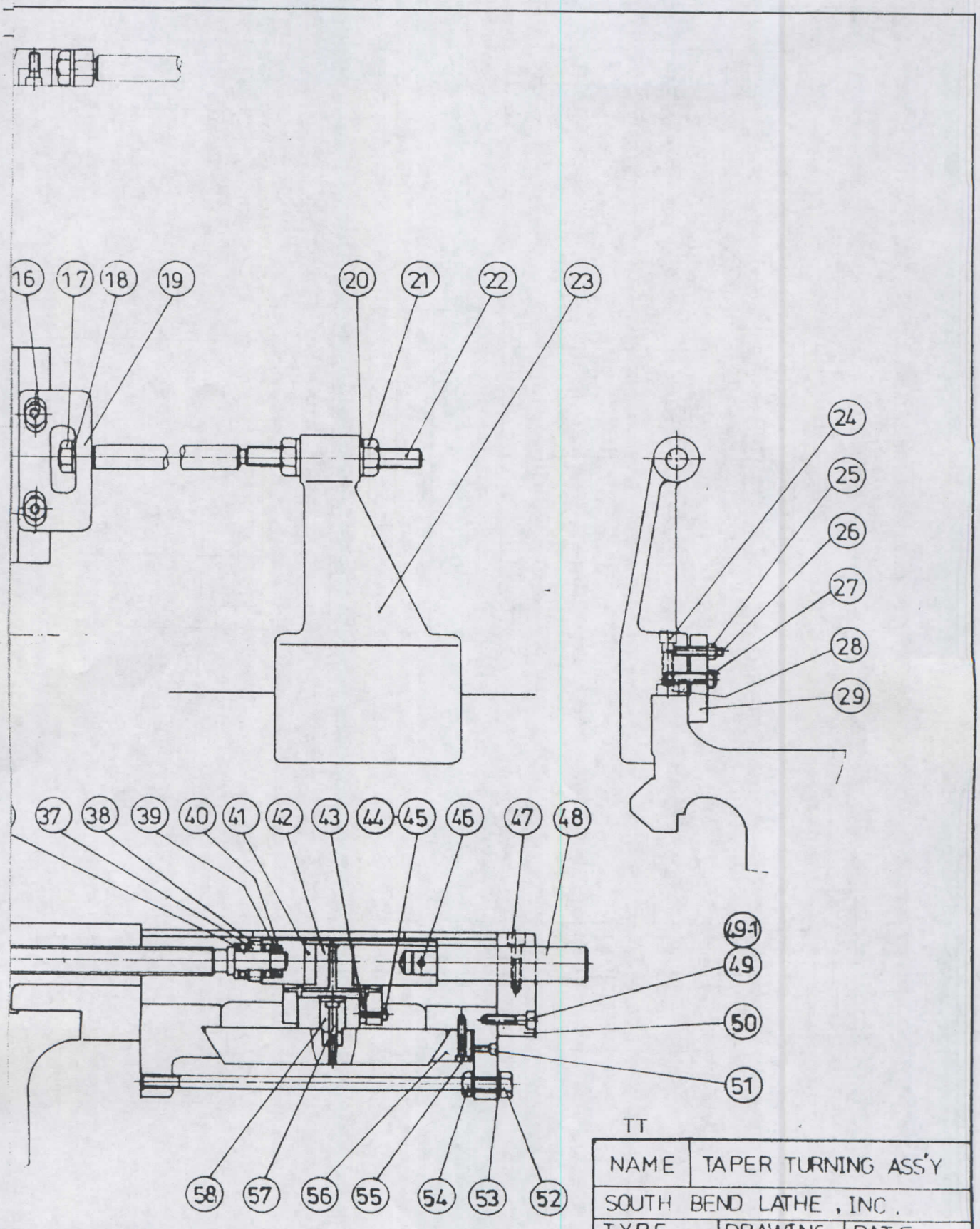

TT

NAME	TAPER TURNING ASS'Y	
SOUTH BEND LATHE , INC .		
TYPE	DRAWING	DATE
SBL 400	P . G . J .	1983, 1

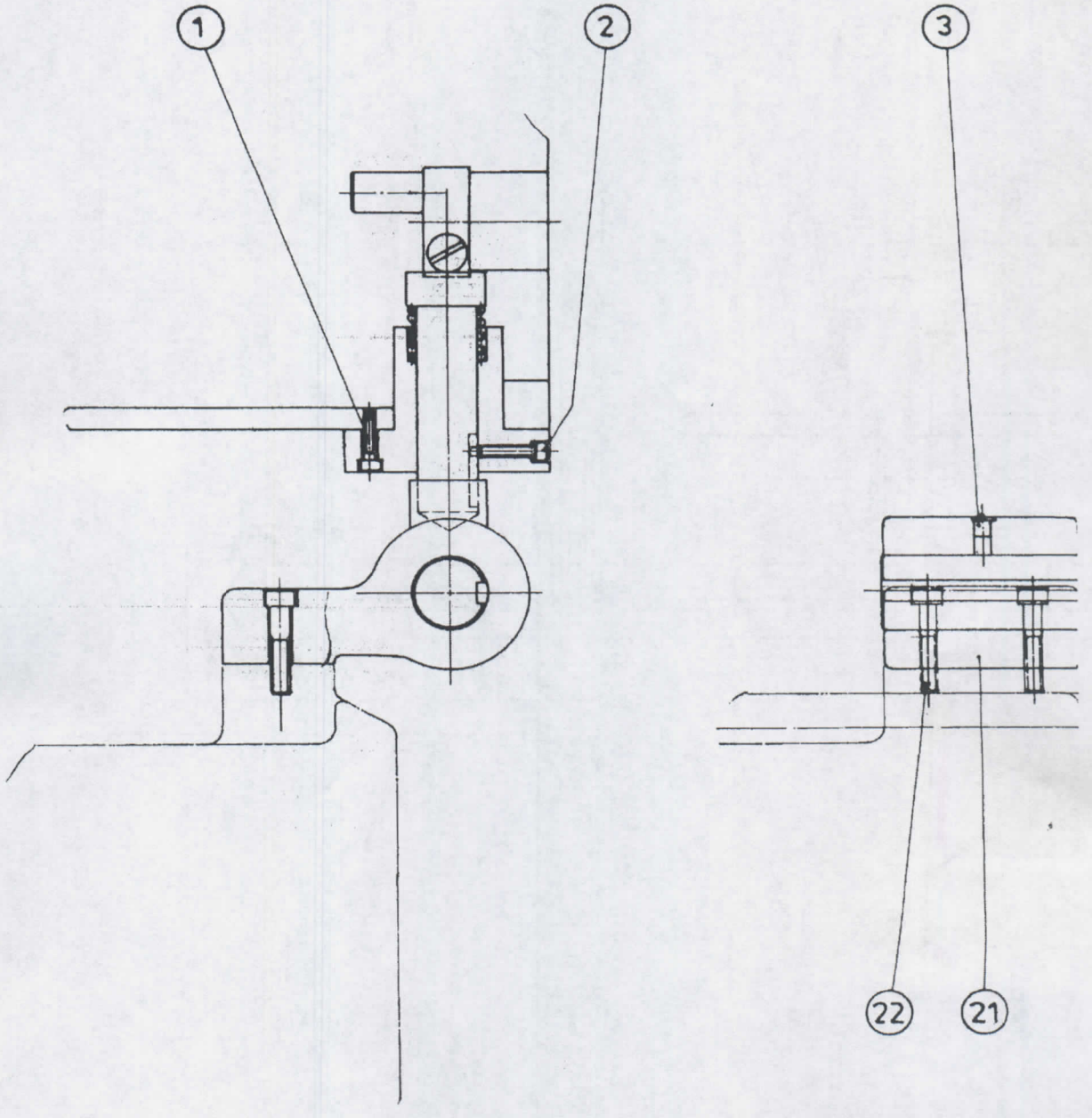
1
2
3
22
21

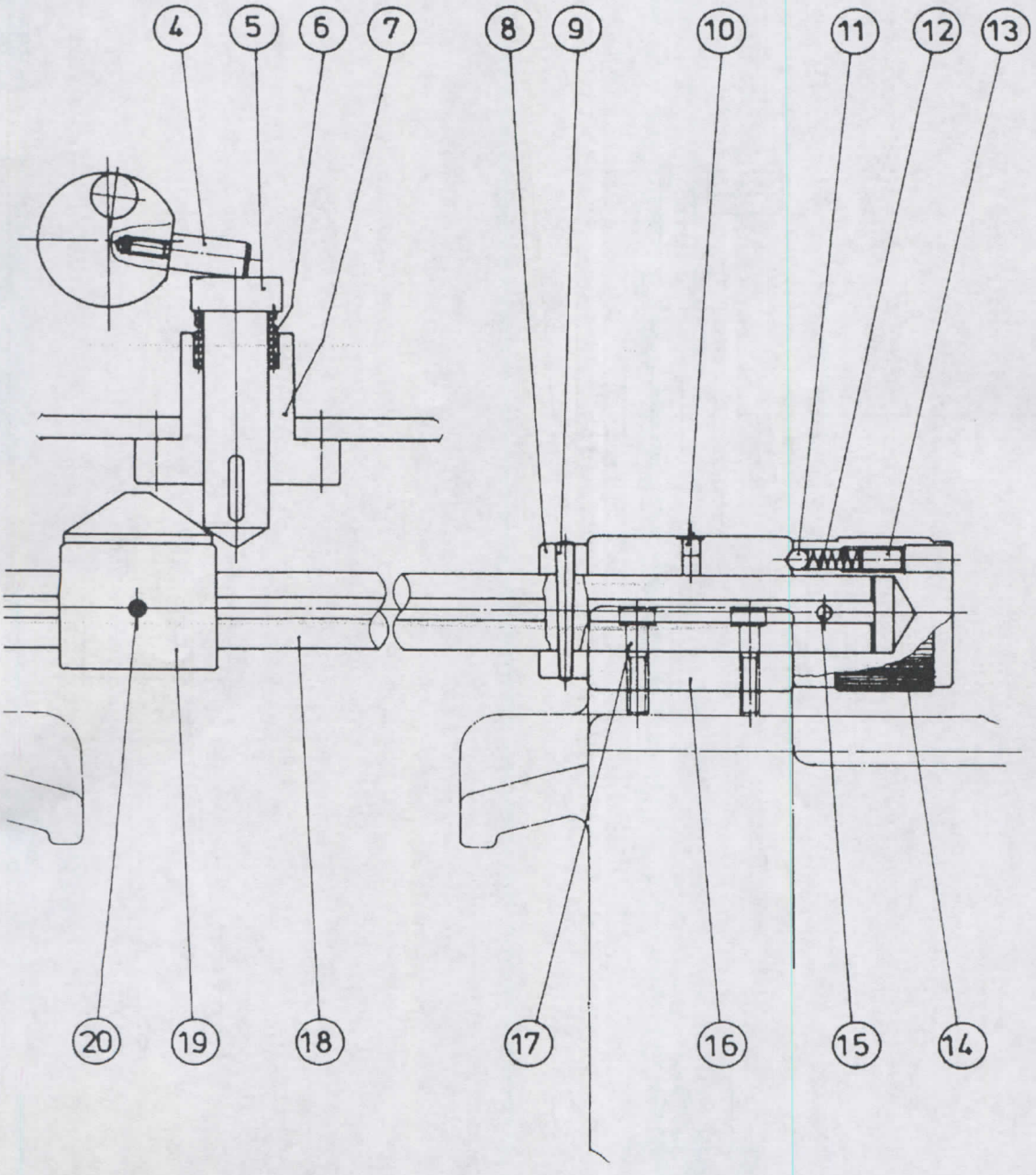

LN

NAME	LONGITUDINAL STOPPER	
SOUTH BEND LATHE, INC.		
TYPE	DRAWING	DATE
SBL 400	P. G. J.	82. 12.

400 TAPER TURNING ASS'Y TT

ITEM	PART NUMBER	DESCRIPTION	Q'TY
1	PT1802049 S	COLLAR	1
2	101 x 31612	SCREW, SOCKET HEAD CAP	4
3	PT2202046 S	COLLAR	2
4	PT1301149 F	SCREW, ADJUSTING	1
5	553 x 316	PIN, SPRING	2
6	PT4302010 S	KNOB	1
7	PT2802029 S	NUT	1
8	551 x 832	PIN, TAPER	2
9	119 x 122	BOLT, HEX	2
9-1	141 x 12	WASHER	2
10	521 x 410	SCREW, MACHINE	8
11	PT1702075 F	COVER	1
12	159 x 516	OILER	1
13	159 x 516	OILER	4
14	PT2801026 S	NUT, SQUARE	2
15	101 x 38114	SCREW, SOCKET HEAD CAP	2
16	101 x 51634	SCREW, SOCKET HEAD CAP	2
17	125 x 58	NUT, HEX	1
18	141 x 58	WASHER	1
19	PT2201099 F	BRACKET	1
20	141 x 58	WASHER	2
21	125 x 58	NUT, HEX	1
22	PT1302151 F	RID, TIE	1
23	PT2205097 F	BRACKET, TIE ROD	1
24	101 x 38114	SCREW, SOCKET HEAD CAP	2
25	125 x 12	NUT, HEX	2
26	103 x 12112	SCREW, SOCKET HEADLESS SET	2
27	101 x 38138	SCREW, SOCKET HEAD CAP	3
28	PT1907023 S	JAW	2
29	PT2202098 F	CLAMP	1
30	PT1401163 F	GEAR, SHAFT	1
31	PT2901021 S	T-KEY	1
32	PT1301150 F	SCREW, T.A. CROSS FEED	1
33	PT1205068 F	BRACKET, BED	1
34	PT1205069 F	BED, TAPER ATTACHMENT	1
35	PT1201070 F	BAR, SWIVEL	1
36	51102	BEARING, THRUST BALL	2
37	PT1801050 S	COLLAR	1
38	101 x 31612	SCREW, SOCKET HEAD CAP	4
39	AW 02	WASHER, LOCK NUT	1
40	AN 02	NUT, LOCK	2
41	PT2205096 F	SLIDER	1
42	PT1206041 S	SADDLE, SLIDE	1
43	PT3102009 S	GIB	1
44	103 x 31612	SCREW, SOCKET HEADLESS SET	2
45	101 x 31638	SCREW, SOCKET HEAD CAP	3
46	551 x 636	PIN, TAPER	1
47	101 x 38114	SCREW, SOCKET HEAD CAP	1
48	PT1301152 F	SHAFT	1
49	101 x 38158	SCREW, SOCKET HEAD CAP	2

400 TAPER TURNING ASS'Y TT

ITEM	PART NUMBER	DESCRIPTION	Q'TY
49-1	551 x 154	PIN, TAPER.....	2
50	PT2405038 F	CLAMP.....	1
51	101 x 1458	SCREW, SOCKET HEAD CAP.....	4
52	PT2802056 F	BOLT, HEX.....	2
53	141 x 12	WASHER.....	2
54	125 x 12	NUT, HEX.....	2
55	101 x 14114	SCREW, SOCKET HEAD CAP.....	4
56	PT3105025 F	GIB.....	1
57	101 x 14138	SCREW, SOCKET HEAD CAP.....	1
58	PT2901020 S	PIN.....	1

400 FOUR POSITION STOP FP

ITEM	PART NUMBER	DESCRIPTION	Q'TY
1	PT2922141 W	SHOE.....	1
2	103 x 51638	SCREW, SOCKET HEADLESS SET.....	1
3	159 x 516	OILER.....	1
4	103 x 516	SCREW, SOCKET HEADLESS SET.....	4
5	PT2922141 W	SHOE.....	4
6	PT1301304 W	SCREW, STOP.....	4
7	119 x 1212	BOLT, HEXAGON.....	1
8	PT2002052 W	WASHER.....	1
9	125 x 12112	NUT, HEXAGON.....	1
10	PT2802112 W	BOLT, STUD.....	1
11	PT1201140 W	SPINDLE.....	1
12	157 x 516	BALL, STEEL.....	1
13	PT1205047 F	BODY.....	1
14	PT2402091 W	CLAMP.....	1
15	SP1640	SPRING.....	1
16	103 x 51638	SCREW, SOCKET HEADLESS SET.....	1
17	PT2801113 W	NUT.....	1

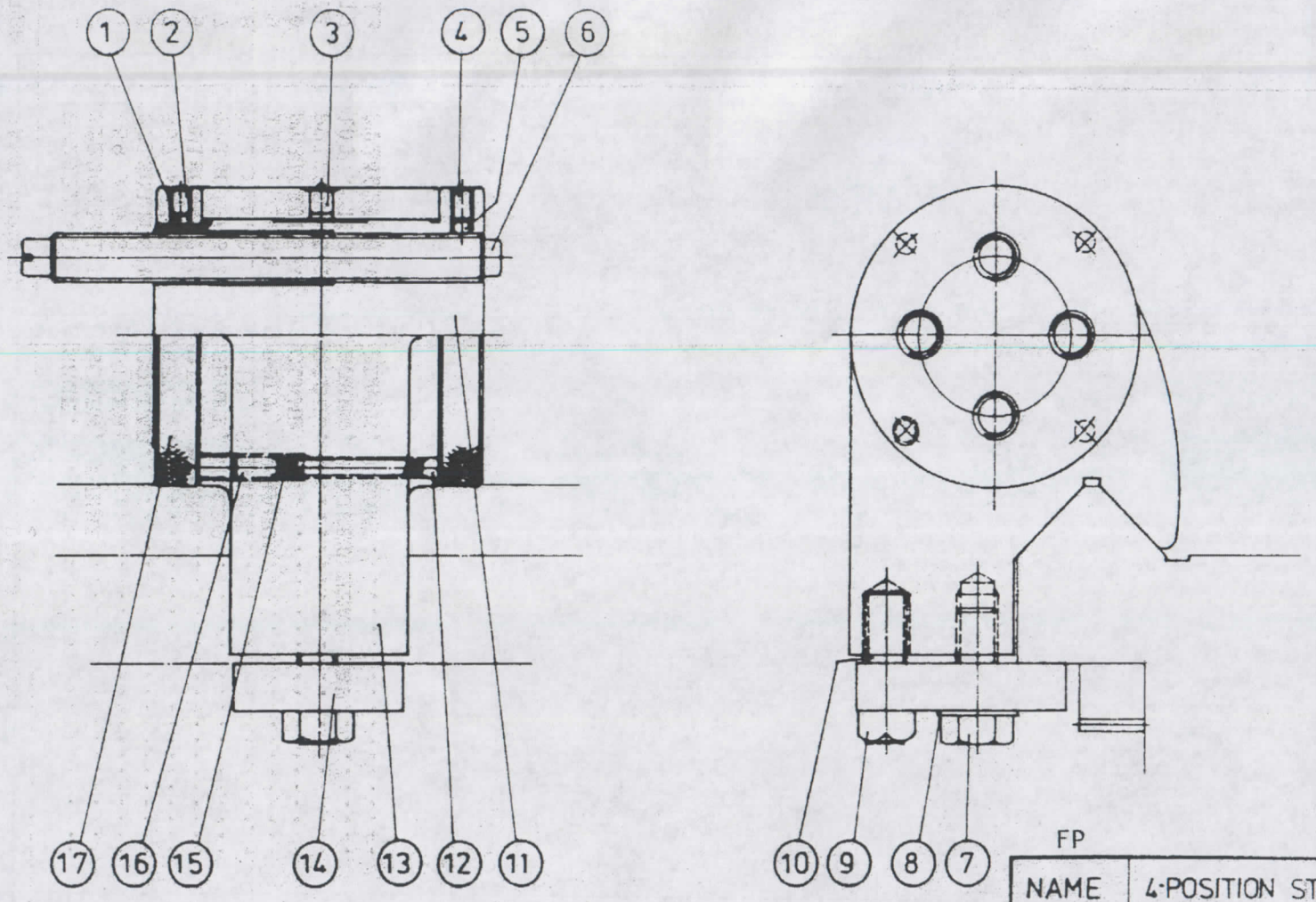

FP

NAME	4-POSITION STOPPER	
SOUTH BEND LATHE . INC.		
TYPE	DRAWING	DATE
SBL 400	P. G. J.	1983. 2

400 MICROMETER CARRIAGE STOP MS

ITEM	PART NUMBER	DESCRIPTION	Q'TY
1	PT2922140 W	SHOE.....	1
2	PT2802111 W	SCREW, THUMB.....	1
3	159 x 516	OILER.....	1
4	PT1801186 W	COLLAR.....	1
5	557 x 448	KEY.....	1
6	PT1801187 W	DIAL, MICRO.....	1
7	PT1301303 W	SHAFT, MICRO.....	1
8	553 x 520	PIN, SPRING.....	2
9	119 x 3834	BOLT, HEXAGON.....	2
10	PT3102055 W	CLAMP.....	1
11	PT1205046 F	BODY.....	1
12	101 x 1234	SCREW, SOCKET HEAD CAP.....	2
13	PT2402090 W	PLATE, CLAMP.....	1